Design of Press Working Tools

Press Working Terminology

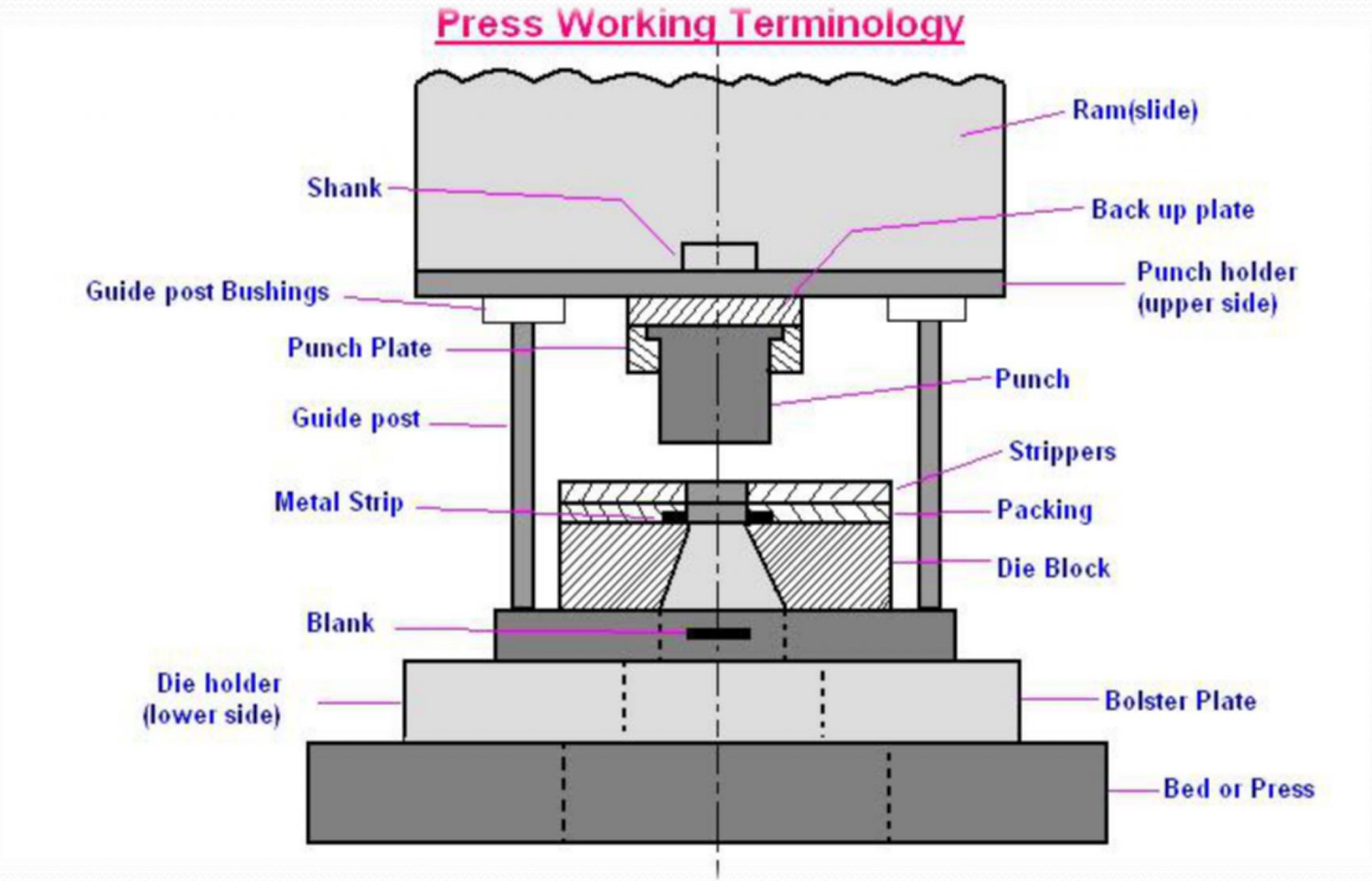

Press Working Terminology

1: Bed:

The bed is the lower part of the press frame that serves as a table to which a Bolster plate is mounted.

2: Bolster Plate:

This is a thick plate secured to the press bed , which is used for locating and supporting the die assembly. It is usually 5 to 12.5 cm thick.

3: Die Set:

It is unit assembly which incorporates a lower and upper shoe, two or more guide parts and guide part bushings.

4: Die Block:

It is a block or a plate which contains a die cavity

5: Lower Shoe:

The lower shoe of the a die set is generally mounted on the bolster plate of a press. The die block is mounted on the lower shoe, also the guide post are mounted on it.

nology

6: Punch :

This is male component of a die assembly, which is directly or indirectly moved by and fastened to the press ram or slide.

7: Upper Shoe:

This is the upper part of the die set which contains guide post bushings.

8: Punch Plate :

The punch plate or punch retainer fits closely over the body of the punch and holds it in proper relative position.

9: Back up Plate:

Back up plate or pressure plate is placed so that intensity of pressure does not become excessive on punch holder. The plate distributes the pressure over a wide area and the intensity of pressure on the punch holder is reduced to avoid crushing.

10: Stripper:

It is a plate which is used to strip the metal strip from cutting a non-cutting Punch or die. It may also guide the

Tools:

Subtopics to be covered:

Introduction.

Press working operations.

Press working Equipments, their rating, calculation of rating or tonnage capacity, selection of press equipments.

Press tool components, press work terminology, working of press tools i.e. dies, setting clearance of die & punch.

Principle of sheet metal cutting in press working, cutting forces, methods for shear force reduction.

Piercing die design, blanking die design, compound die design.

Scrap strip layout for blanking.

Introduction:

Press working is part of sheet metal forming in which mainly sheet metal cutting operations and forming operations are carried out using die & punch assembly to produce sheet metal part on metal working press equipment & support equipments.

A punch is the portion of the tool attached to the ram of the press and is inserted into the die.

A die is usually the stationary portion of the tool attached to the press bed. It has a cavity to accept the punch.

The forming operations were covered in Manufacturing Processes II, while sheet metal cutting and related forming operations will be dealt in this subject.

The sheet metal working process in general is known as cold stamping as the sheet during working on it is always in cold state as press working operations are carried out at room temperature.

Press working operations:

There are many press working operations, some of which are very complex, they can all be reduced to the following simple fundamental operations:

Plain blanking:

- Fig. shows a simple operation of this type.
- The material used is called the *stock* and is generally a ferrous or nonferrous strip.
- During the working stroke the punch goes through the material, and on the return stroke the material is lifted with the punch and is removed by the stripper plate.
- The *stop pin* is a gage for the operator. In practice, he feeds the stock by hand and locates the holes to be punched as shown.
- The part that is removed from the strip is always the work piece /product (blank) in a blanking operation.

Press working operations:

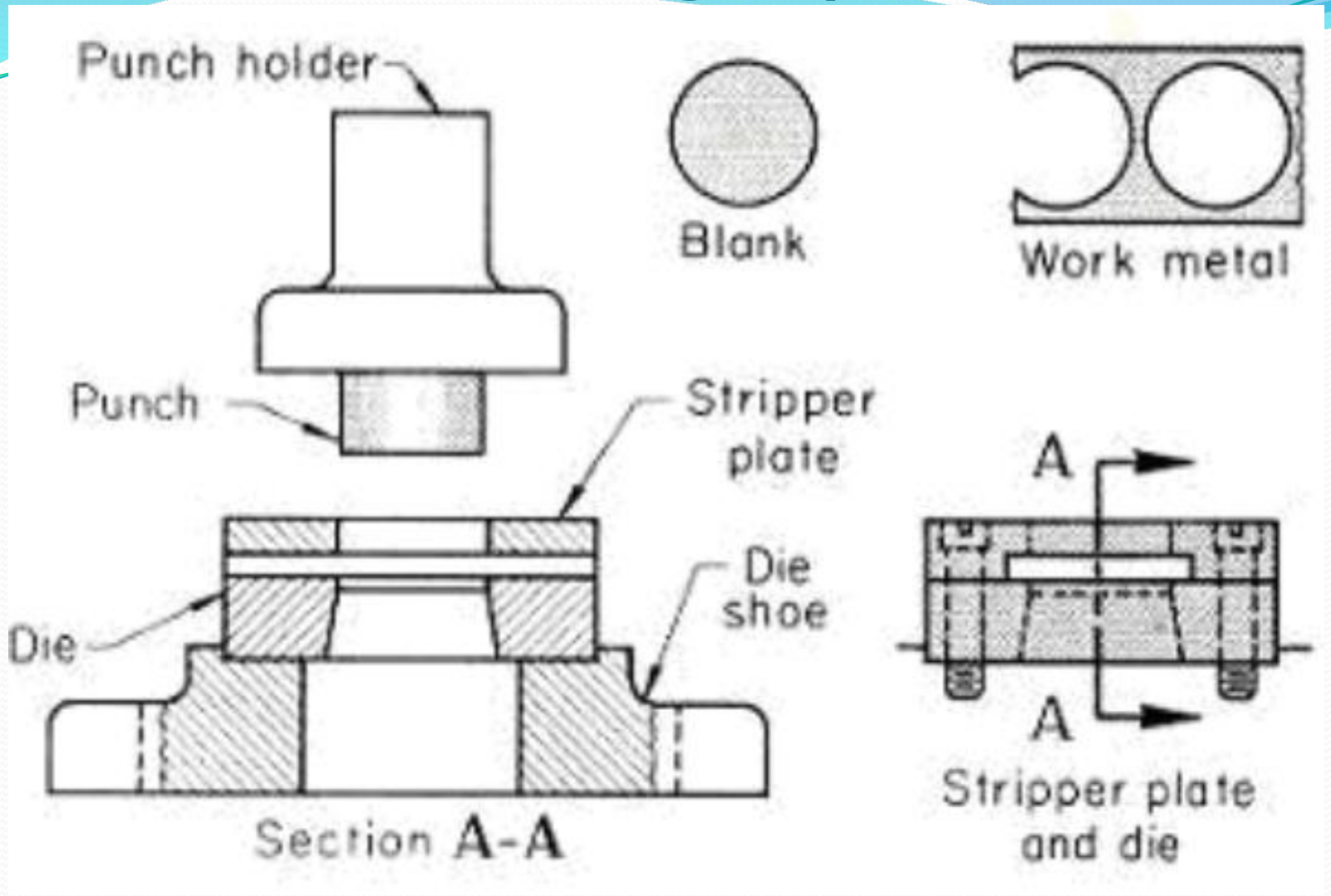

Fig. Plain Blanking Die with product the Blank scrap is strip left after.

The strip is inserted between die and stripper plate.

Press working operations:

Piercing:

- This operation consists of simple hole punching.
- It differs from blanking in that the punching (or material cut from stock) is the scrap and the strip is the work piece.
- Piercing is nearly always accompanied by a blanking operation before, after, or at the same time.
- Fig. shows a typical piercing die assembly.

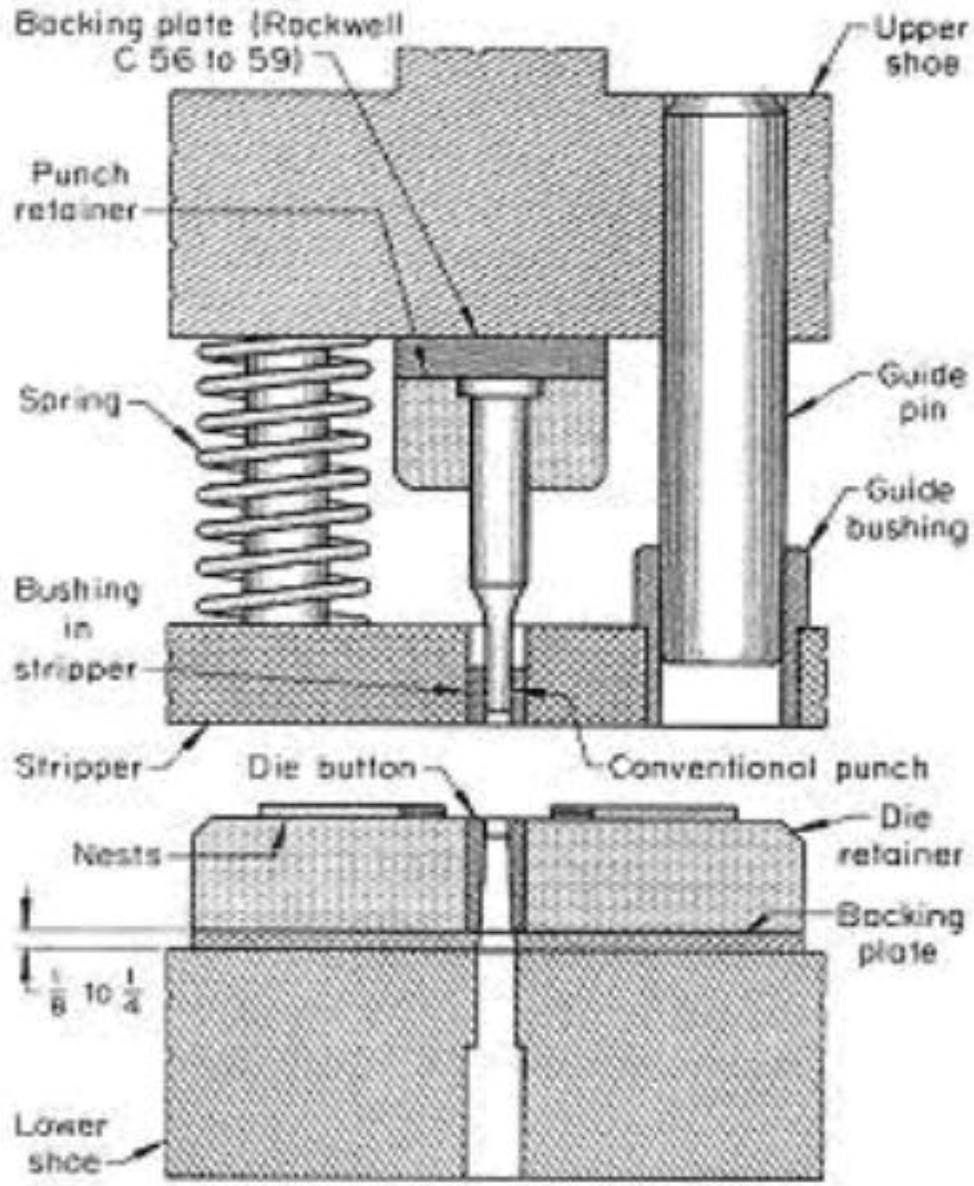

Fig. Piercing Die Assembly

Press working operations:

Lancing:

- This is a combined bending and cutting operation along a line in the work material.
- No metal is cut free during a lancing operation.
- The punch is designed to cut on two or three sides and bend along the fourth side. Fig. show the principle of the lancing operation.

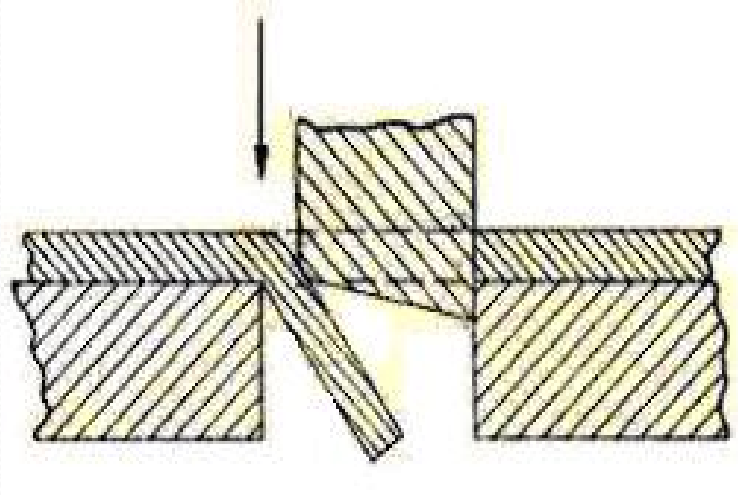

Fig. lancing action

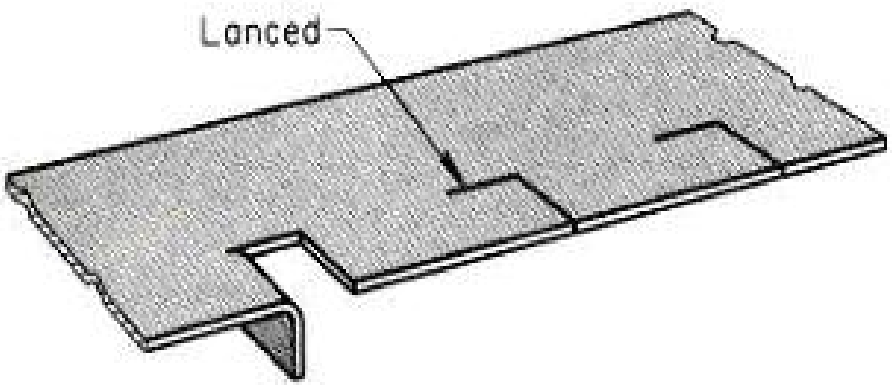

Fig. Strip lanced for free metal for forming

Press working operations:

Cutting off and parting:

A *cutoff* operation separates the work material along a straight line in a single-line cut (Fig.).

When the operation separates the work material along a straight line cut in a double-line cut, it is known as *parting* (Fig.). Cutting off to separate the work piece from the scrap strip.

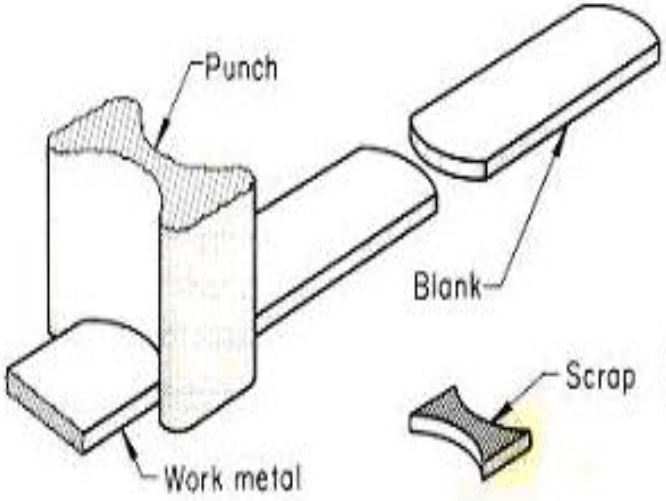

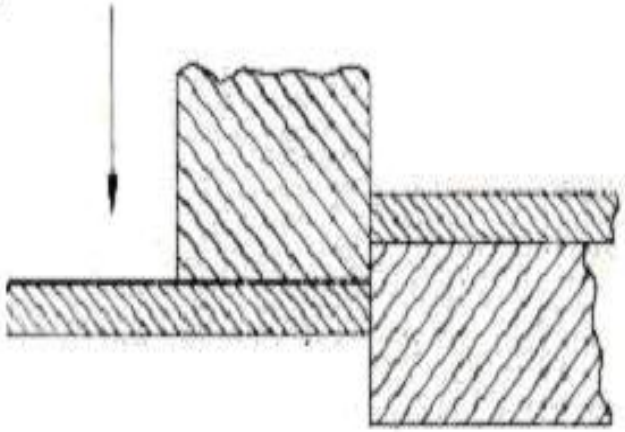

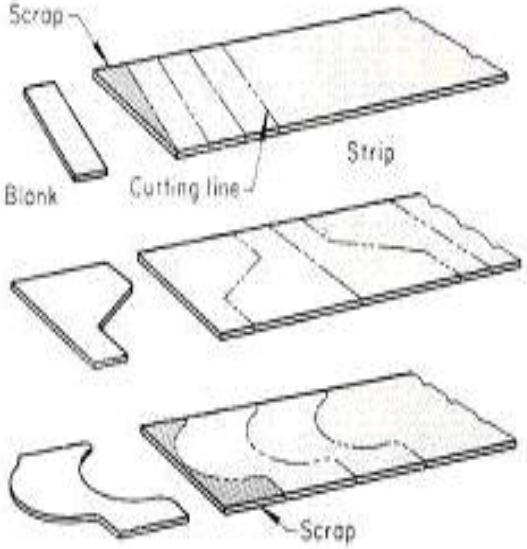

Fig. Parting **Fig. 4-5 Cutoff action** **Fig. 4-7 Layout for making blanks by Cutoff**

Press working operations:

Cutting off and parting usually occur in the final stages of a progressive die. Cutting off is also used to chop up the scrap strip skeleton as it leaves the die. This makes the scrap much easier to handle. Fig. 4–7 shows the basic principles of cutting off and parting.

Notching:

- This operation removes metal from either or both edges of the strip. Notching serves to shape the outer contours of the workspace in a progressive die or to remove excess metal before a drawing or forming operation in a progressive die. The removal of excess metal allows t
without interference fro ides.

Fig. Notching

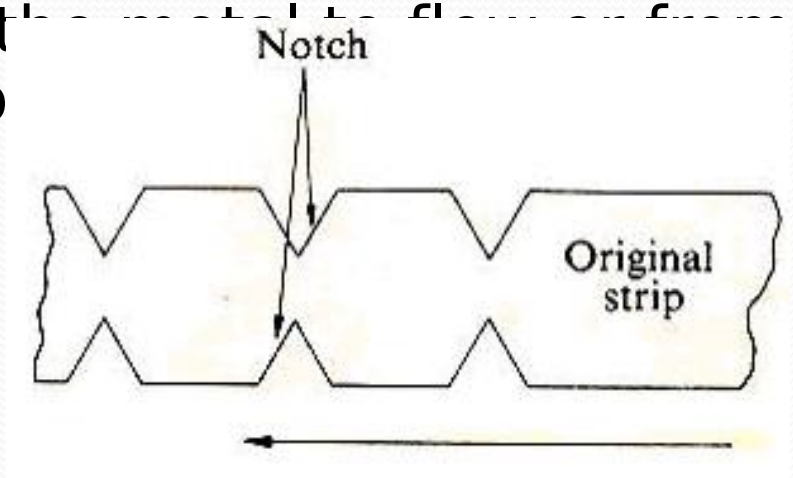

Press working operations:

Shaving:

Shaving is a secondary operation, usually following punching, in which the surface of the previously cut edge is finished smoothly to accurate dimensions.

The excess metal is removed much as a chip is formed with a metal–cutting tool.

There is very little clearance (close to zero) between the punch and die, and only a thin section of the edge is removed from the edge of the work piece. Fig. described the shaving operation.

Fig. Shaving

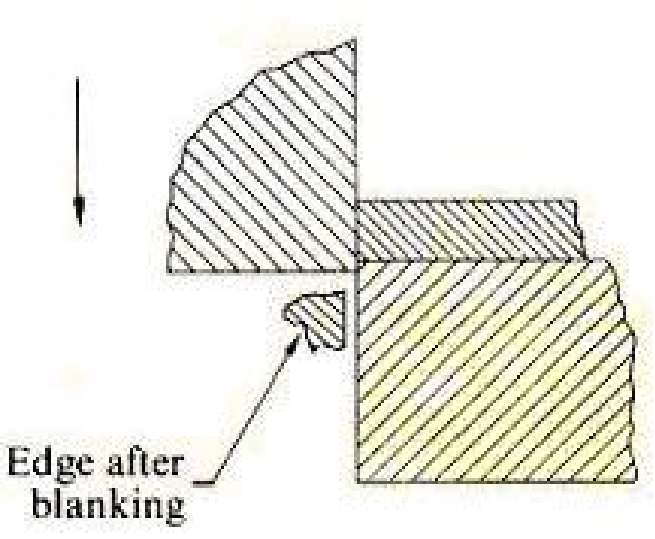

Press working operations:

Trimming:

This operation removes the distorted excess metal from drawn or formed parts and metal that has been needed in a previous operation.

It also provides a smooth edge. Fig. 4–10 shows tooling for Trimming a horizontal flange on a drawn shell in a separate operation.

After scrap from a sufficient number of trimmed shells has accumulated, the piece of scrap at the bottom is severed at each stroke of the press by scrap cutter shown in this figure and falls clear.

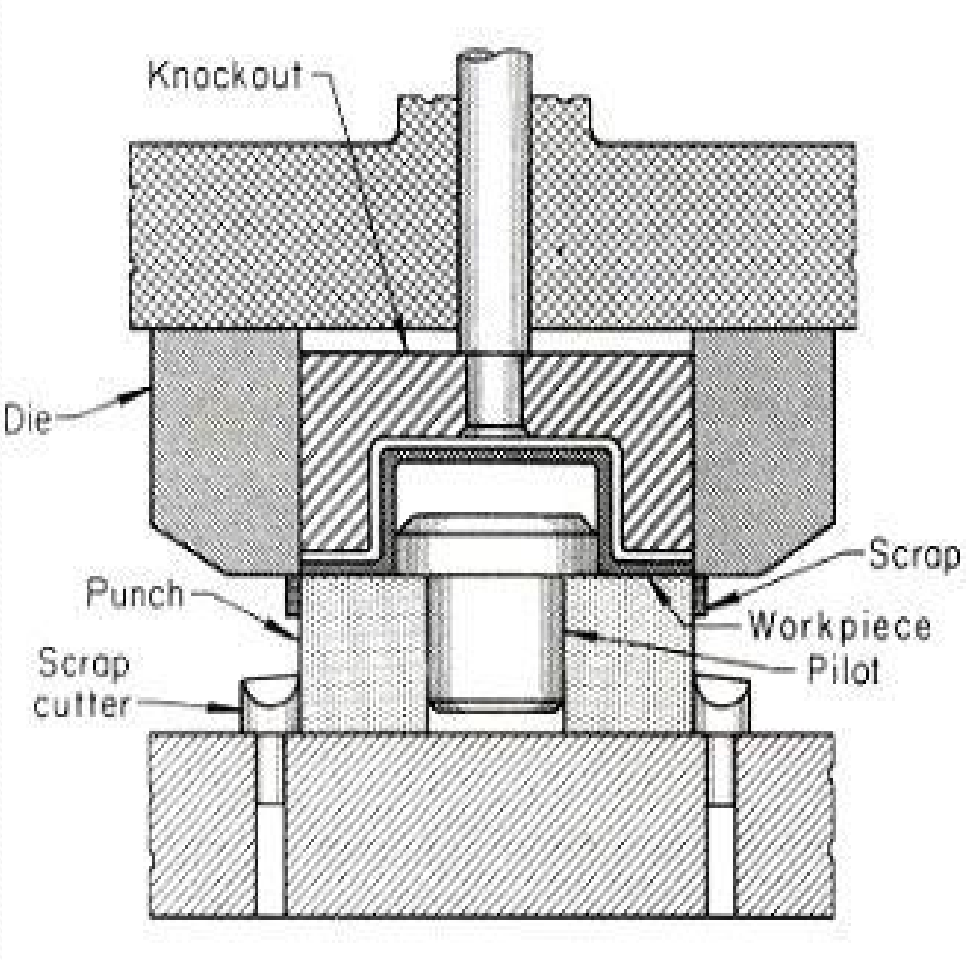

Fig. Trimming a horizontal flange

According to the Power Source

These power source are categorized as :

- ***Manually Operated or Power Driven***

These presses are used to process thin sheet metal working operations where less pressure or force is required. These are operated by manual power. Most of manually operated presses are hand press, ball press or fly press.

- ***Power Presses***

Power presses are normally driven by mechanical mechanism or hydraulic system. Power source of these presses may be electric motor or engine.

According to the Type and Design of Frame

The type and design of frame depending on the design of frame these are classified as:

- **Inclinable.**
- **Straight side.**
- **Adjustable bed.**
- **Gap frame.**

According to the Type and Design of Frame

- ***Inclinable Frame Press***

Its frame is called inclinable due to its capability to tilt back up to some angle. It can be locked into nay of its inclined position. I : the scrap so it is al inclinable press.

Type and Design of Frame

- ***Gap Frame Press***

These presses have larger frame openings, that means a wide gap between its base and ram to accommodate larger work pieces. It also

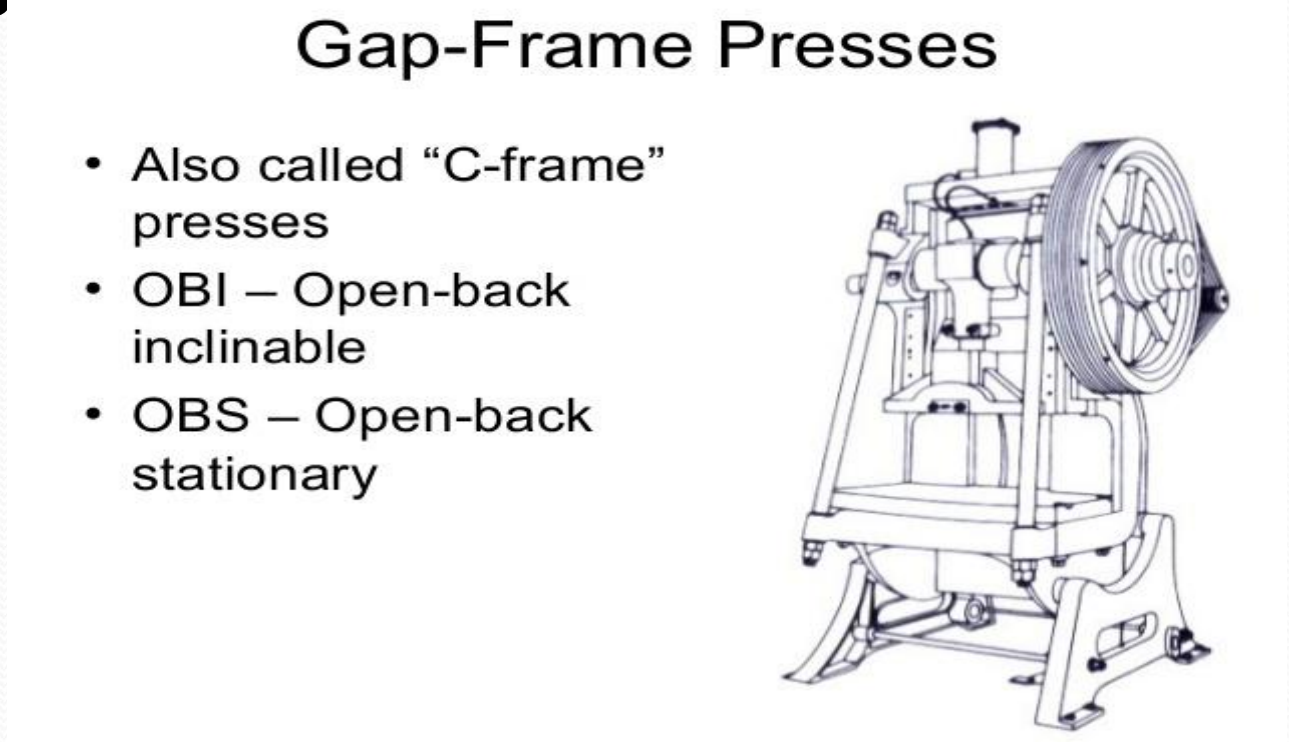

- ***Straight Side Press***

These presses have straight side type frame which is preferred for presses having larger bed area and high tonnage. This offers greater rigidity and capable of longer strokes. The frame consists of ve ght sides so it is called straight

Type and Design of Frame

- ***Adjustable Bed Type Press***

It is also called column and knee type press because it has a knee type bed supported on its column shaped frame. Its bed (knee) can be adjusted at any desirable height by moving [illegible] wn with the help of p[illegible]

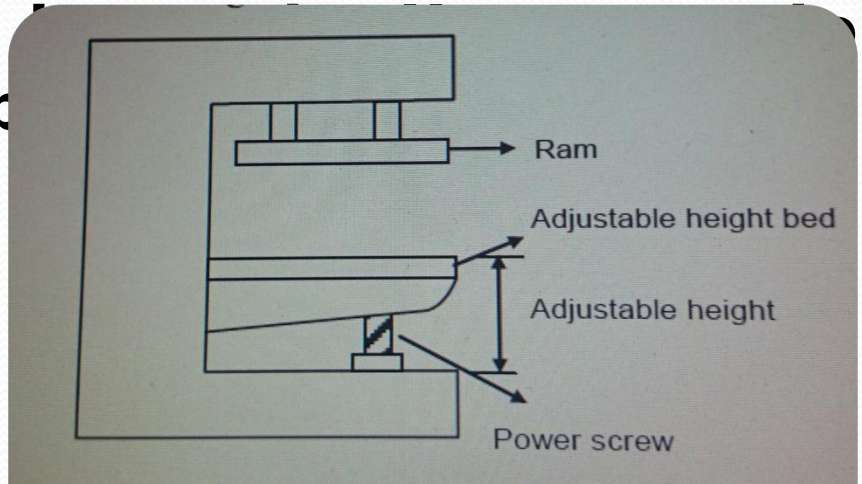

Figure 3.4 : Adjustable Bed Type Press

FLY PRESS

A fly Press is a machine tool used to shape sheet metal by deforming it or cutting it with punches and dies

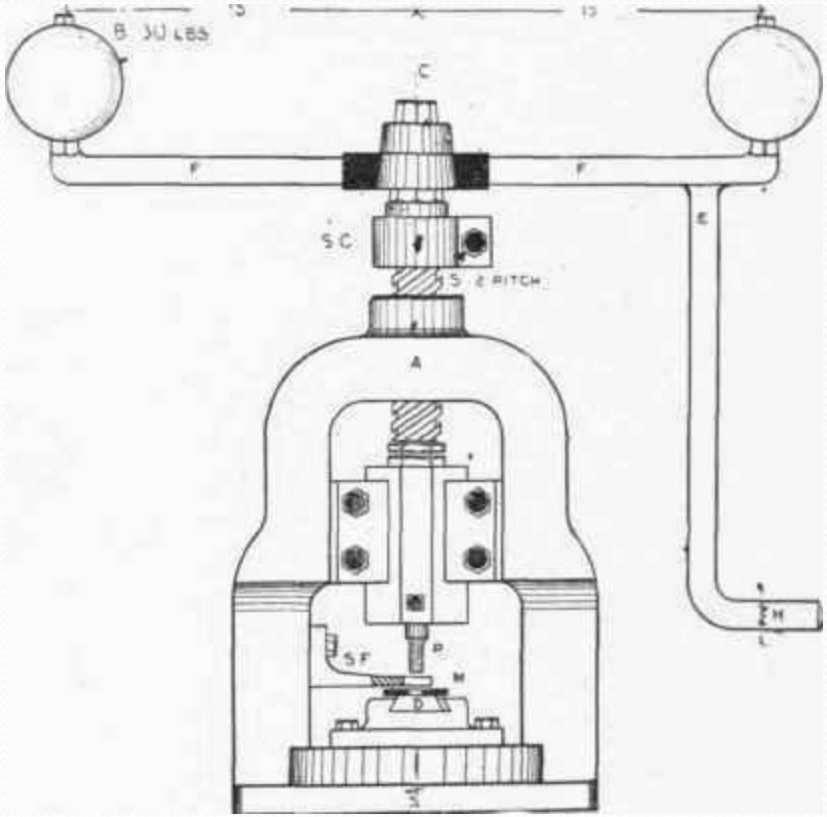

SCREW PRESS

A screw press is a type of machine press in which the ram is driven up and down by a screw.

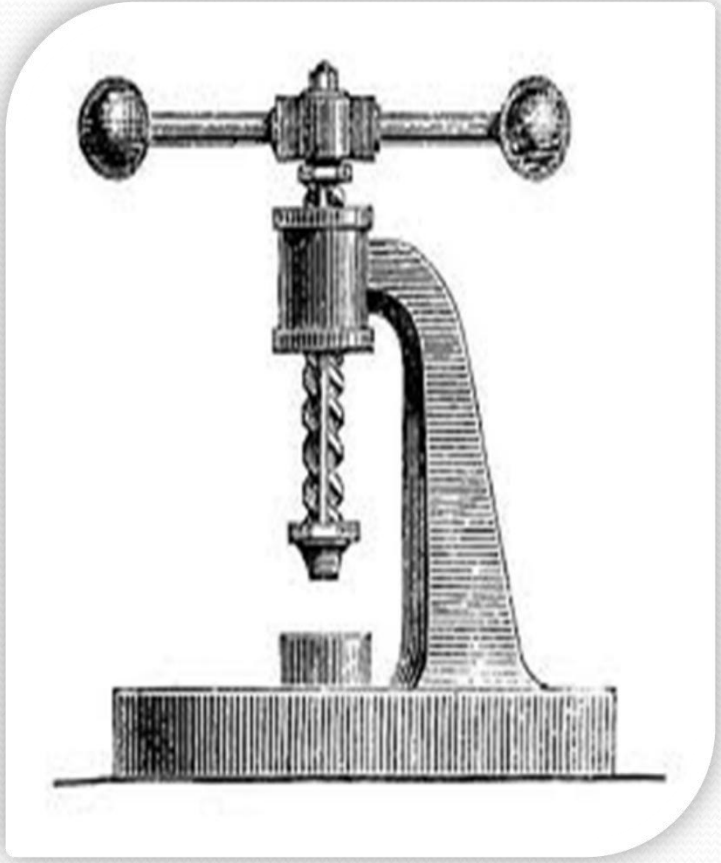

Transmit Power to Ram

- ***Crank Press***

It consists of crankshaft driven by a flywheel, rotary motion of the crankshaft is converted into reciprocating motion with the help of a connecting rod connected to ram.

- ***Cam Driven Press***

In this press, a cam is used to press the ram down words and suitably located springs restore the original position of ram when pressure applied is removed.

- ***Eccentric Press***

In this press, the driving shaft carries an eccentric integral with it. One end of the connecting rod carried an attachment of revolving eccentric and its other end is connected to ram. As the eccentric shaft

According to the Purpose of Use

Some of the operations require low stroke strength and some lager stroke strength. In the same way requirements of stroke length is different for different operations. So depending on power and stroke length presses are classified as given below depending on their suitability of performing different operations.

- **Shearing press**
- **Seaming press**
- **Punching press**
- **Extruding press**
- **Coining press**
- **Forging press**
- **Rolling press**
- **Bending press.**

Press Working Equipments: Power Press

POWER PRESS:

- The power presses are available for metal-cutting and forming operations, they are available in varied type and tonnage capacity with different principle of power drive for ram motion for desired operations.
- The selection of power press depending upon the type of operation.
- Due to very wide variety only the basic types of presses and press mechanisms will be considered for the necessary background for designing press tooling.

Press Working Equipments: Power Press

Presses classification:

The presses are classified according to:

(1) Type of frame,

(2) Source of power,

(3) Method of actuation of slides;

(4) Number of slides incorporated, and

(5) Intended use.

- Most presses are not classified by only category one but several.
- For example, a straight-side press may be mechanically or hydraulically driven and may be either single or double acting.

Press Working Equipments: Power Press

Classification by frame type:

- The frame of a press is fabricated by
  - Casting or
  - By welding heavy steel plates.
- Cast frames are quite stable and rigid but expensive. Cast frame construction also has the advantage of placing a mass of material where it is needed most.

Welded frames are generally less expensive and are more resistant to shock loading because of the greater toughness of steel plate.

- The general classification by frame includes
  - The gap frame and the straight side.
- The gap frame is cut back below the ram to form the shape of a letter C.
- This allows feeding a strip from the side.

Press Working Equipments: Power Press

- Some gap-frame presses have an open back to permit strip feeding from front to back or ejection of finished parts out the back.
- Gap-frame presses are manufactured with solid frames fixed in a vertical or inclined position.
- Others are manufactured with a separate frame mounted in a base, which allows the frame to be inclined at an angle in three different positions.
- The reason for inclining the press is to allow parts to fall through the open back by gravity. The three-position inclinable press is frequently referred to as an open-back inclinable (OBI) press (see Fig.).
- Solid gap-frame presses are obtainable in higher tonnages than inclinable ones because of the rigid base and solid

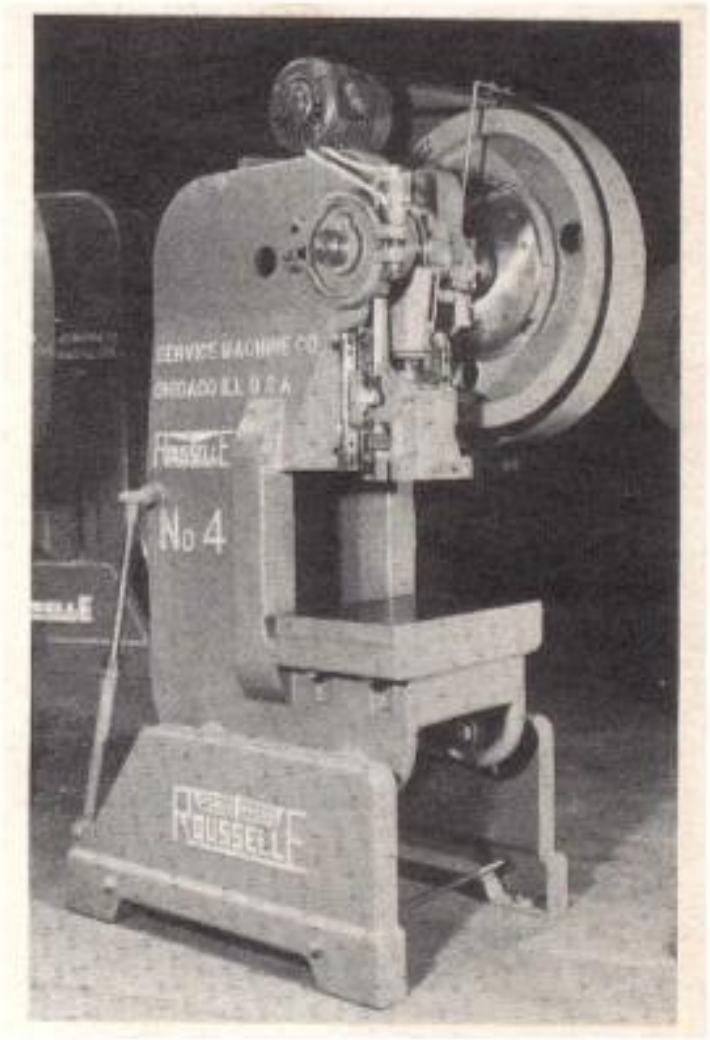

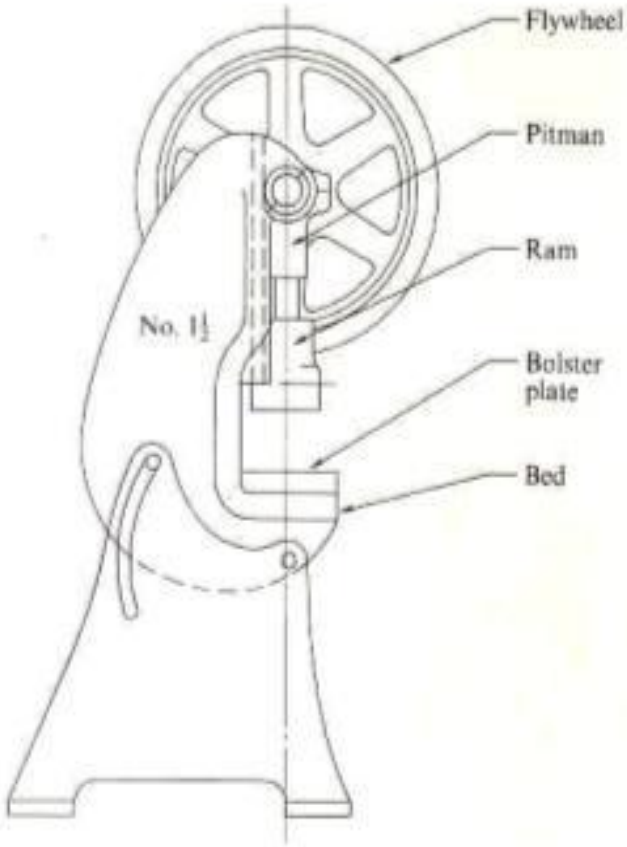

Fig. OBI Press with components shown

Press Working Equipments: OBI Power Press

- **OBI PRESS SPECIFICATIONS**:
  - **Clearing Back Geared OBI Stamping Press**
  - **Capacity** ..... 80 **Tones**
  - **Bed Area** ..... 900 **X** 600 **mm**
  - **Stroke** 100**mm**
  - **Shut Height** ..... 400 **mm**
  - **Adjustment** ..... 75 **mm**
  - **Speed** 40
  - **SPM Equipped With**: **Bed Cushion** (**Capacity @** 4.0 **bar** 6.0 **Tons**, 75 **mm Stroke**)
  - 5.5 **Kw Motor** (1800 **RPM**, **Driveshaft RPM** 300)
  - **Trabon Lube System Back Geared**
  - **Approx. Weight**:800**Kg.**
  - **Approx. Height**: 1.8 **M****
  - **See a video of this press under power**: **http://www.youtube.com/watch?v=0mG6mVACQg8 ****
  - 80 **Tone Clearing Back Geared OBI Stamping Press**
  - **PRICE**.....:

The straight slide press:

- It incorporates a slide or ram, which travels up and down between two straight sides or housing and commonly used for large and heavy work.
- The size of the press is limited to some extent because reduce the working area.
- The frame construction does permit large bed areas and longer strokes.
- The drive mechanism is generally located above the bed, The straight slide press incorporates a slide or ram, which travels up and down between two straight sides or housing and commonly used for large and heavy work.
- The size of the press is limited to some extent because reduce the working area. However the frame construction does permit large bed areas and longer strokes.

Press

- The drive mechanism is generally located above the bed, although under drive presses may be obtained with the drive mechanism located below the bed.

- Straight side presses are classified as single, two or four point suspension, depending upon the number of connection between the slide and the main drive shaft. Fig,

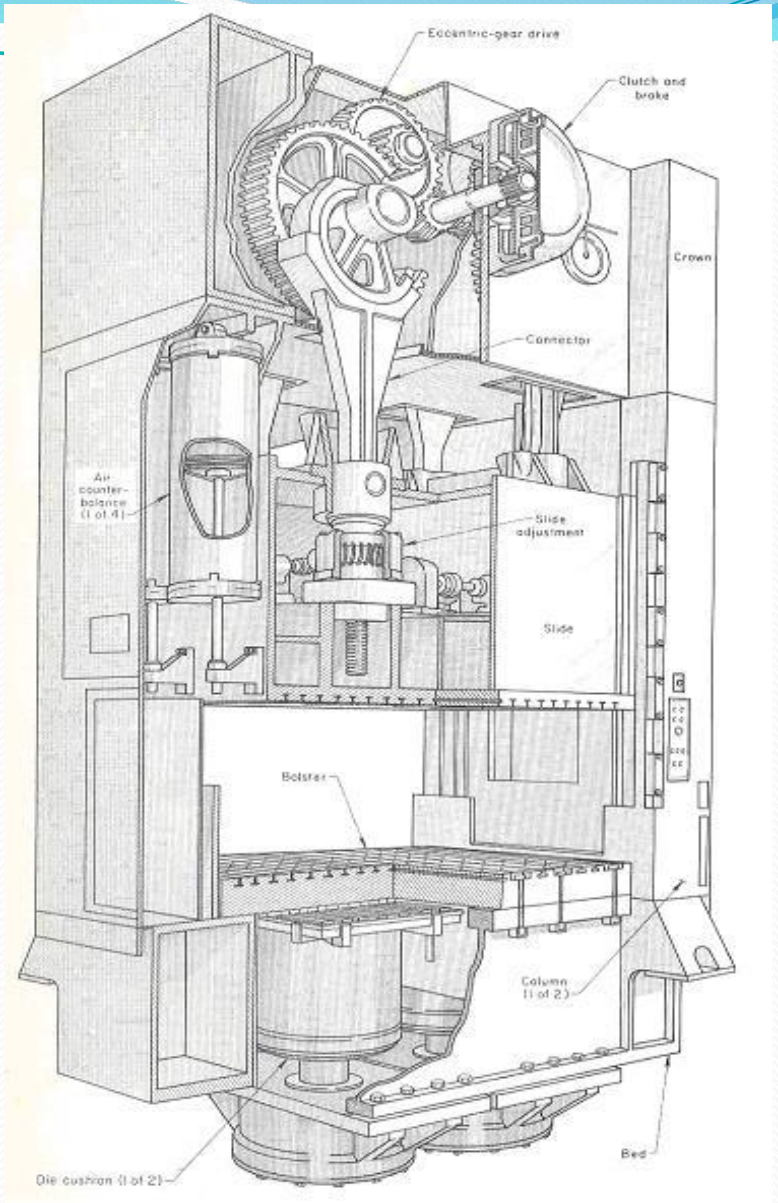

Fig. 3-3 Single action straight side eccentric shaft

Power Press

Classification by source of power:

- The great majority of presses receive their power mechanically or hydraulically.
- A few manually operated presses are hand operated through levers or screws, but they are hardly suited for high production.
- Mechanical presses use a flywheel driven system to obtain ram movement.
- The heavy flywheel absorbs energy from the motor continuously and delivers its stored energy to the work piece intermittently. The motor returns the flywheel to operating speed between strokes. The permission slowdown of the flywheel during the work period is about 7 to 10 percent in non-geared presses and 10 to 20 percent in geared presses.
- The flywheel is attached directly to the main shaft of the press (non geared), or, it is connected to the main shaft by a gear train. Non-gear drives are used on presses of low tonnage and short strokes. The number

Mechanical Power Press

- Gear driven presses transmit the energy of the flywheel through a single or double reduction gear.
- The single reduction gear drive is suited for heavier blanking operations or shallow drawing.
- The double-gear drive is used on large, heavy presses where it is necessary to move large amounts of mass at slower speeds.
- The double reduction greatly reduces the strokes per minute without reducing the flywheel speed. Fig. shows the basic types of mechanical drives.

Basic types of mechanical press drives

a) Non-geared

b) Single geared

c) Single reduction gear

d) Double reduction

Press Drives:

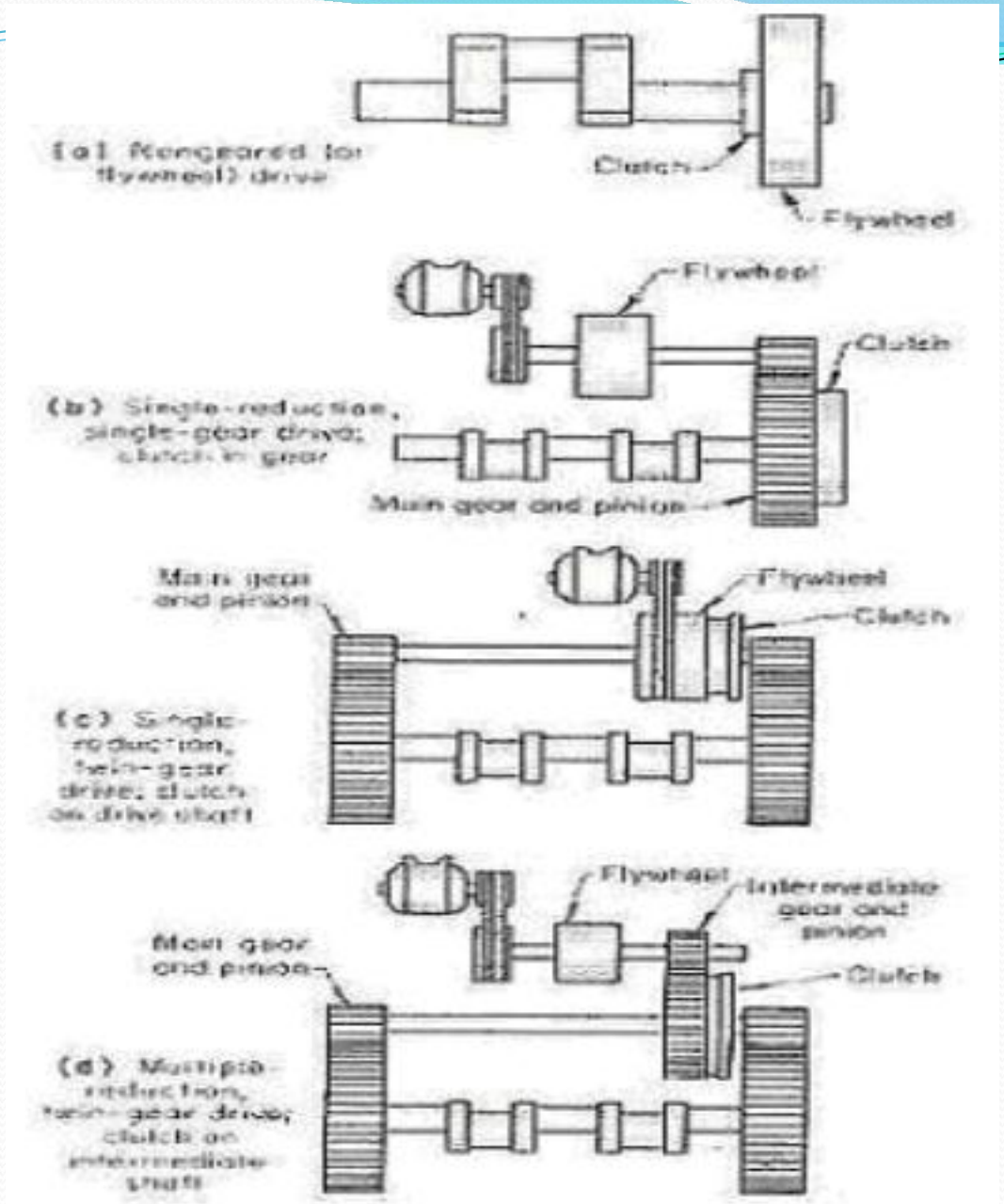

Fig.

Hydraulic Power Press

Hydraulic presses:

- These presses have a large cylinder and piston, coupled to a hydraulic pump.
- The piston and press ram are one unit.
- The tonnage capacity depends upon the cross-sectional area of the piston (or pistons) and the pressure developed by the pump.
- The cylinder is double acting in order to move the ram in either direction.
- The advantage of a hydraulic press is that it can exert its full tonnage at any position of the ram stroke. In addition, the stroke can be varied to any length within the limits of the hydraulic-cylinder travel.
- The speed and pressure are also constant throughout the entire stroke Fig. on next slide shows a typical hydraulically driven press.

Press Working Equipments: Hydraulic Power Press

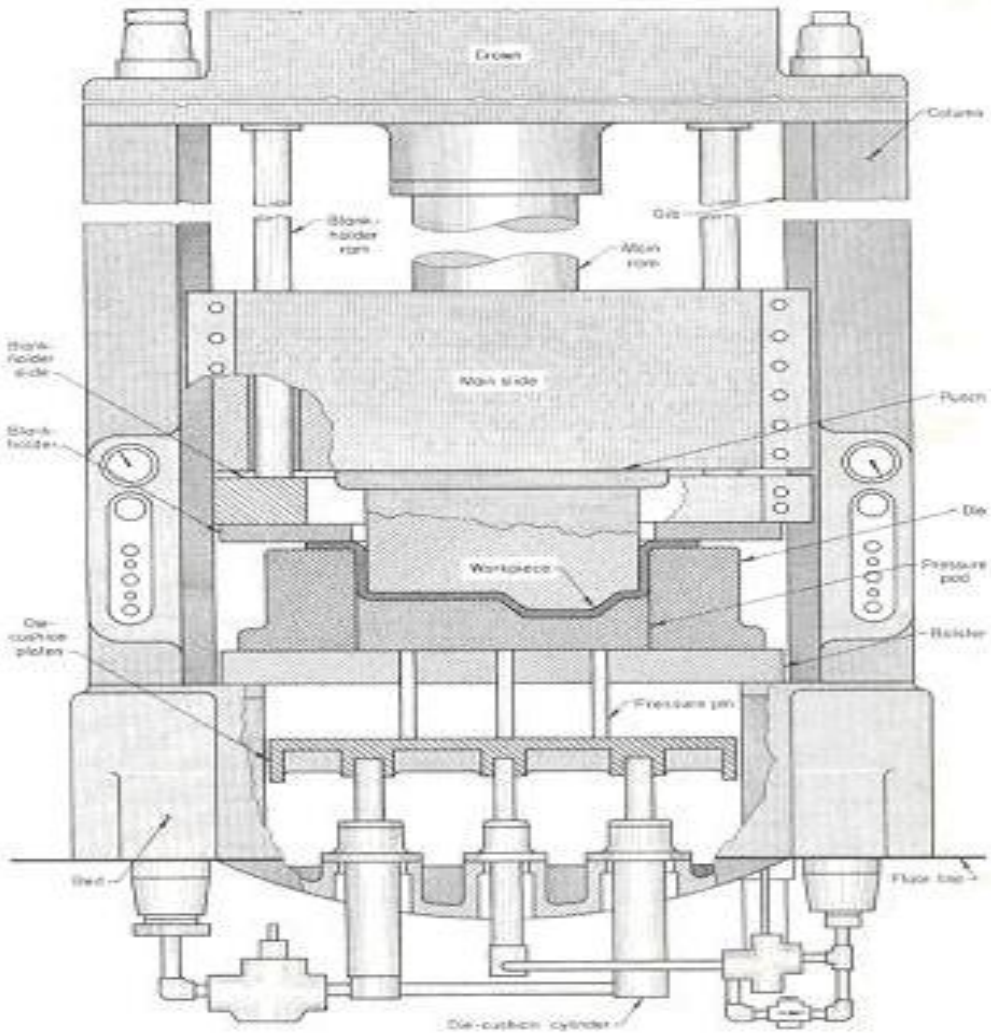

Fig. Typical double action hydraulic press with

SHERING

Critical stages in shearing

1. **Plastic deformation.**
2. **Penetration.**
3. **Fracture.**

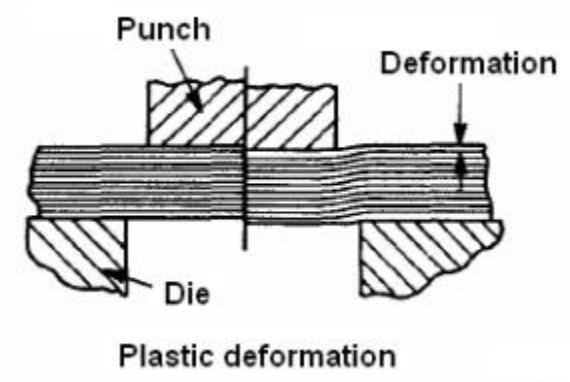

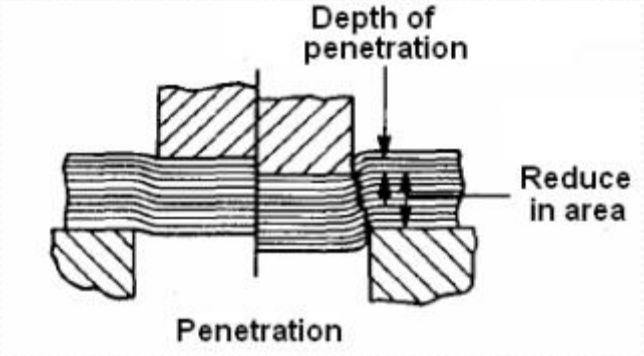

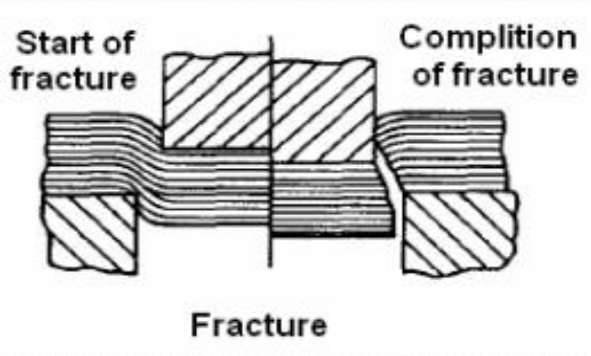

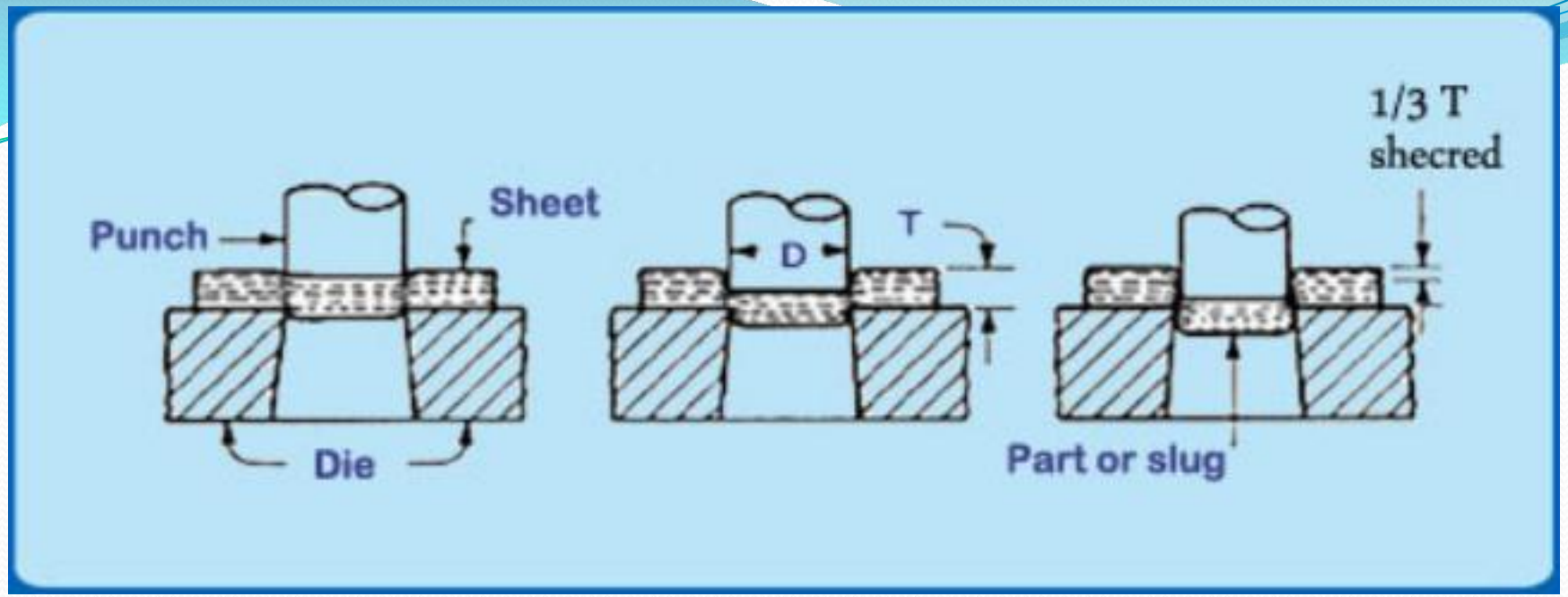
1/3 T
shecred
Sheet
Punch
D
T
Die
Part or slug

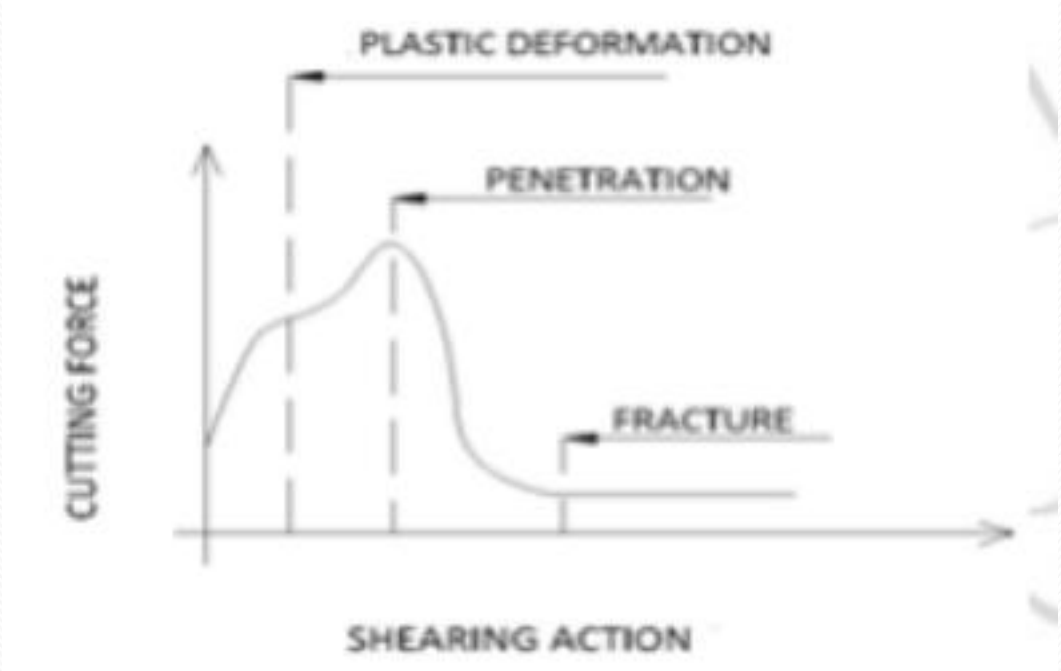
PLASTIC DEFORMATION
PENETRATION
FRACTURE
CUTTING FORCE
SHEARING ACTION

SHEET METAL CUTTING TERMINOLOGY

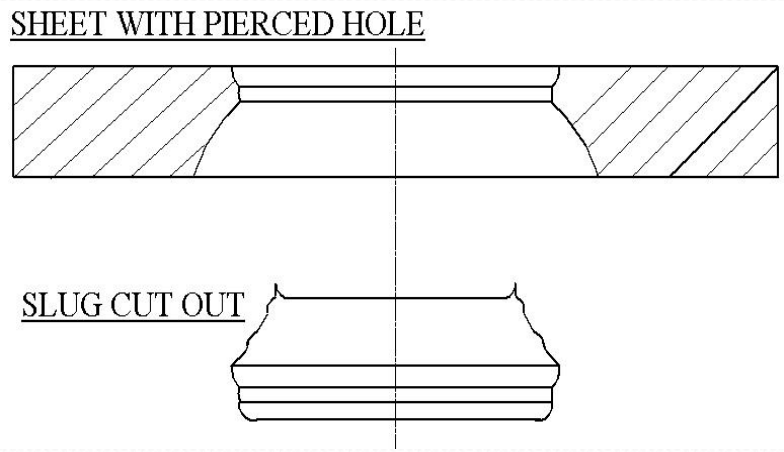

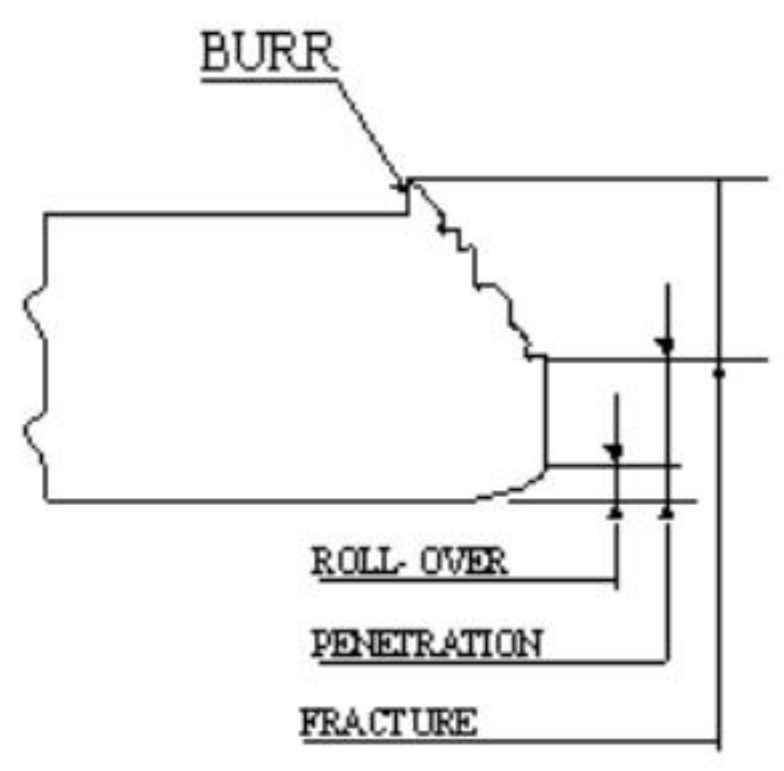

Clearance in Sheet Metal Cutting

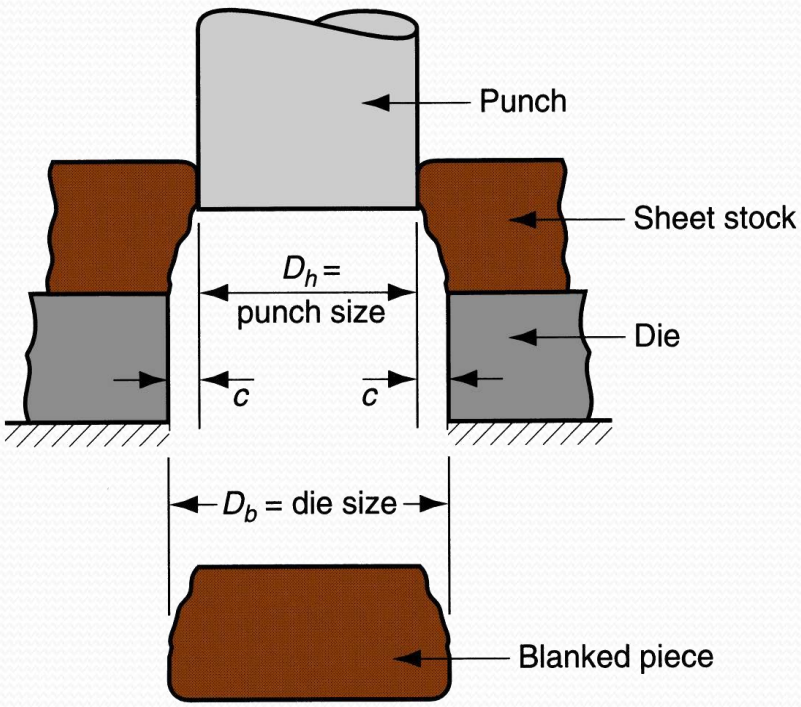

Distance between punch cutting edge and die cutting edge:

Depends on <u>hardness</u> and <u>thickness</u> of materials

Thickness of metal ↗ ↗ c

Typical values range between 4% and 8% of stock thickness

Die size determines blank size D_b
Punch size determines hole size D_h
c = clearance

BACK

BENDING

Bending is the process of folding a sheet about a straight line axis which lies in the neutral plane.

Bends are made in sheet metal to gain rigidity, to produce a part of desired shape & perform a particular function etc. The cross section of the bend inward from neutral axis is in compression, outward from neutral axis is in tension as shown in the fig.

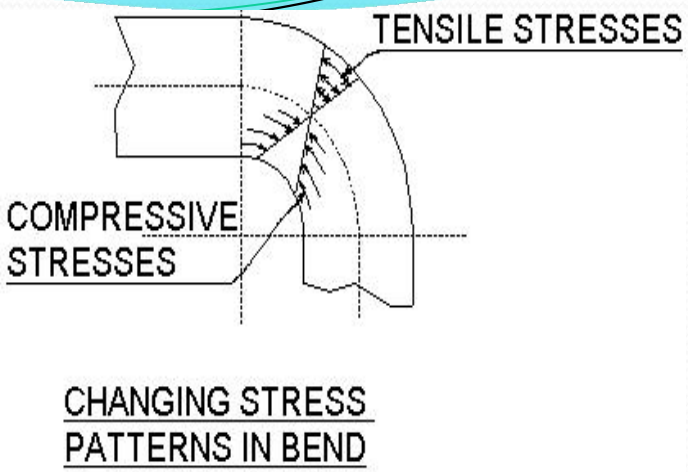

SPRING BACK

During bending the metal nearer to the neutral axis is stressed to the values below the elastic limit. This phenomenon creates a narrow elastic band on both sides of the neutral axis. The metal further away from the neutral axis is stressed beyond the yield strength and is plastically deformed and permanently set. When the bending force on the metal is released the elastic band tries to return to the original flat condition but cannot return fully due to the restrictions of the plastically deformed zones . Some slight return does occur as the elastic and plastic zones come to an equilibrium and this return

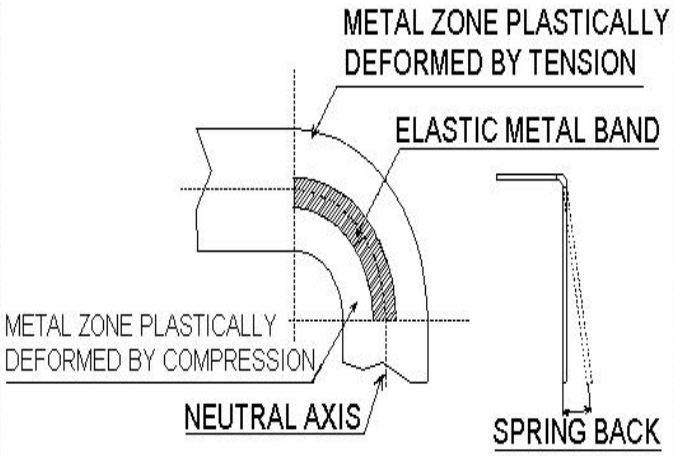

Bending die operations

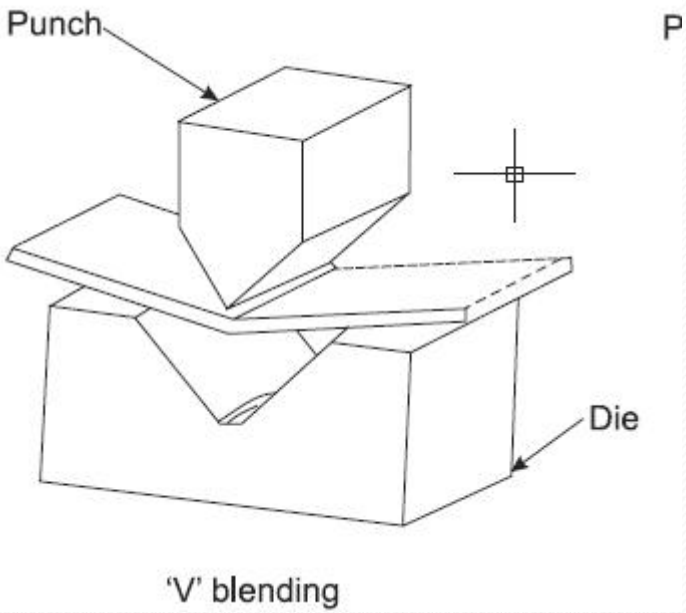

'V' blending

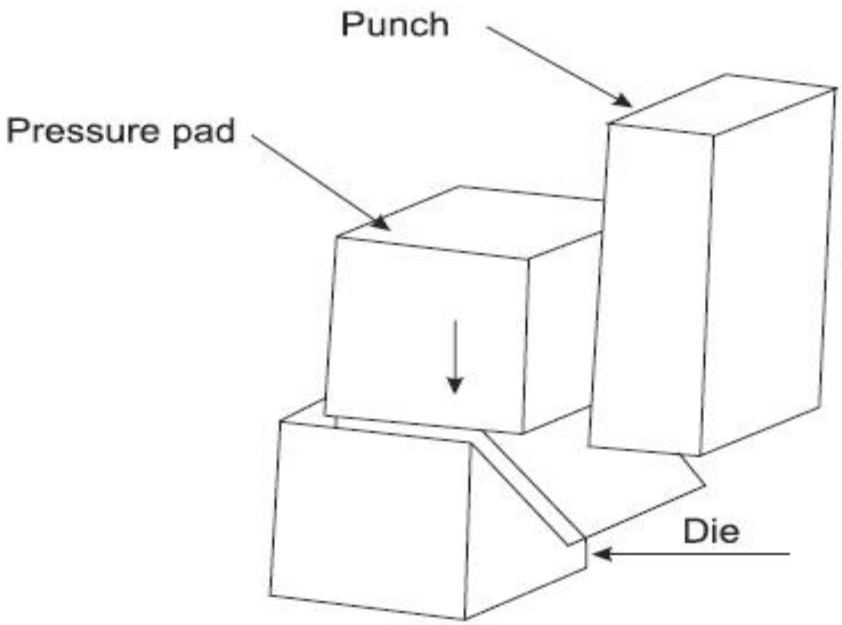

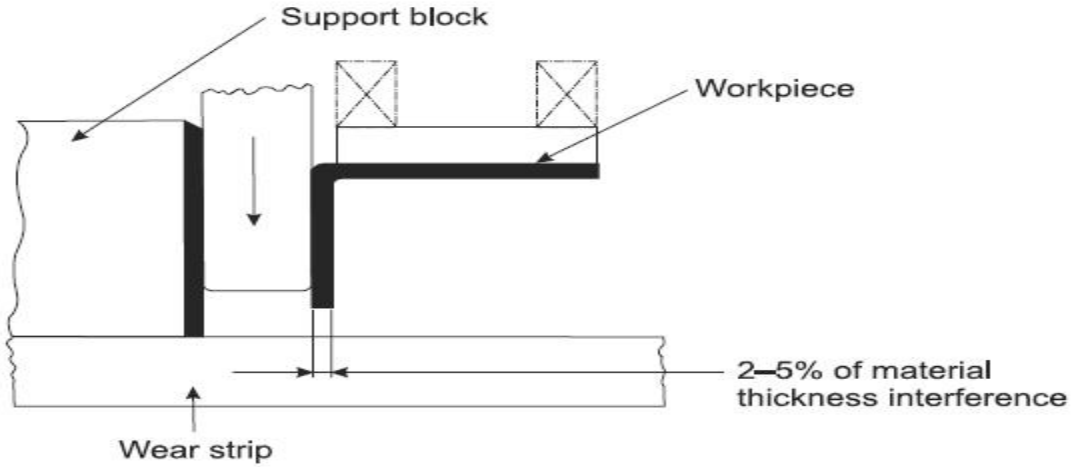

bending die

$$F_{be} = \frac{0.33\,LSt^2}{W}$$

where L = *length of bend pa*

S = *ultimate tensile strength (in N/mm2)*

t = *thickness of blank (in mm)*

W = *width between contact points on the die*

Bend clearance :

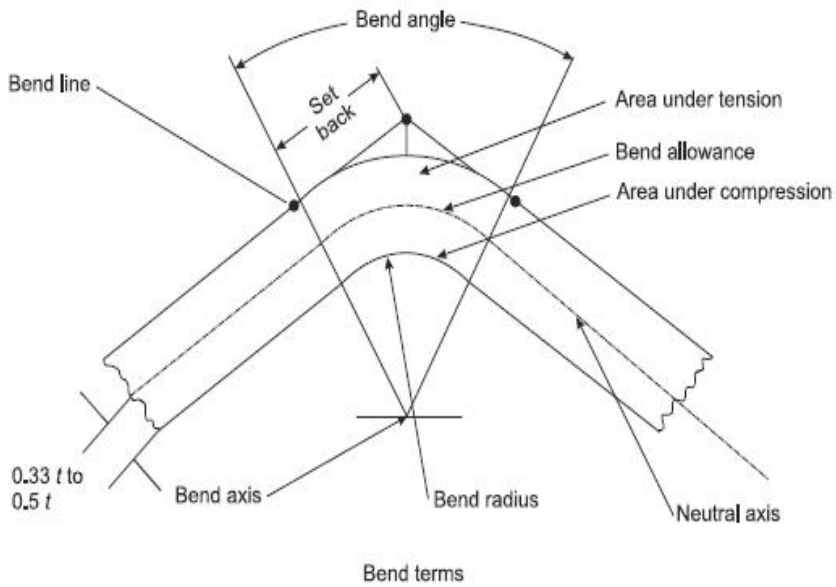

Bend terms

Bend allowance, $$B = \frac{A \times 2\pi[IR + Kt]}{360}$$

where A = bend angle

IR = inside radius of bend (in mm).

K = constant for neutral axis location (0.33 for $IR < 2t$ and 0.50 for $IR > 2t$).

t = metal thickness (in mm).

Bend angle

U shape bend die

'U' bending or channel bending dies are illustrated in Fig. Side clearance in this type of dies should be 10% more than the stock thickness.

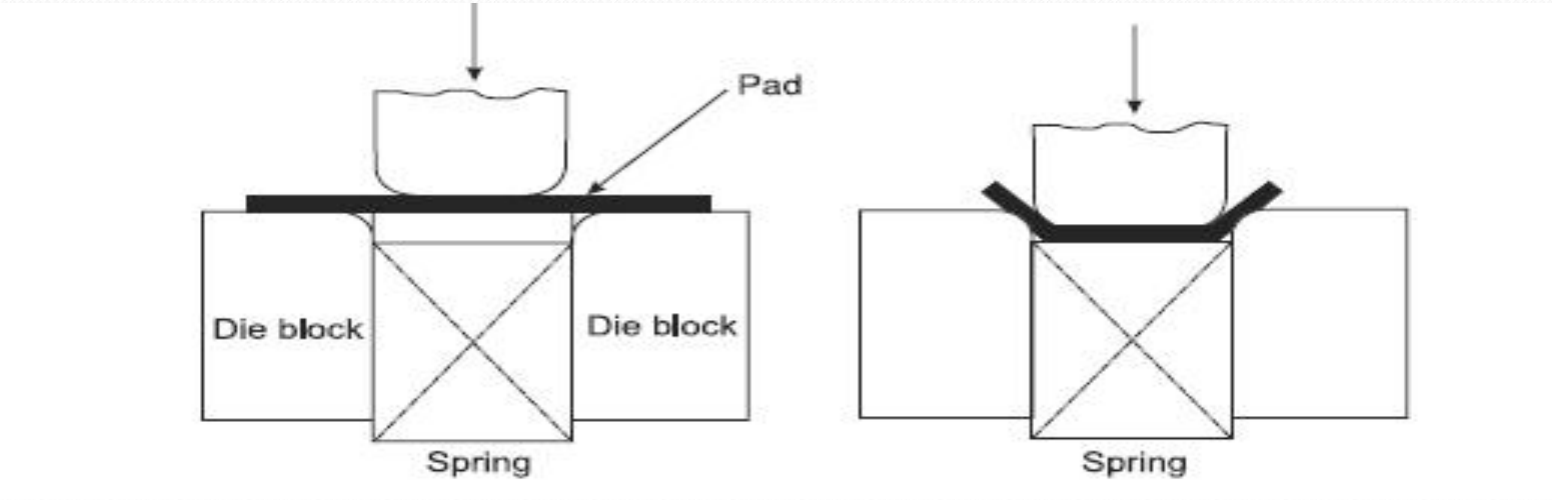

$$F_{bc} = \frac{0.67LSt^2}{W}$$

Drawing dies

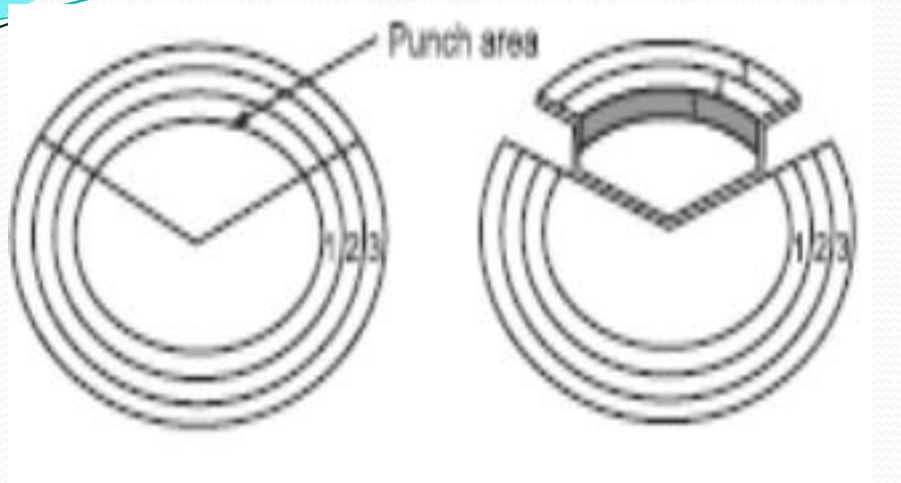

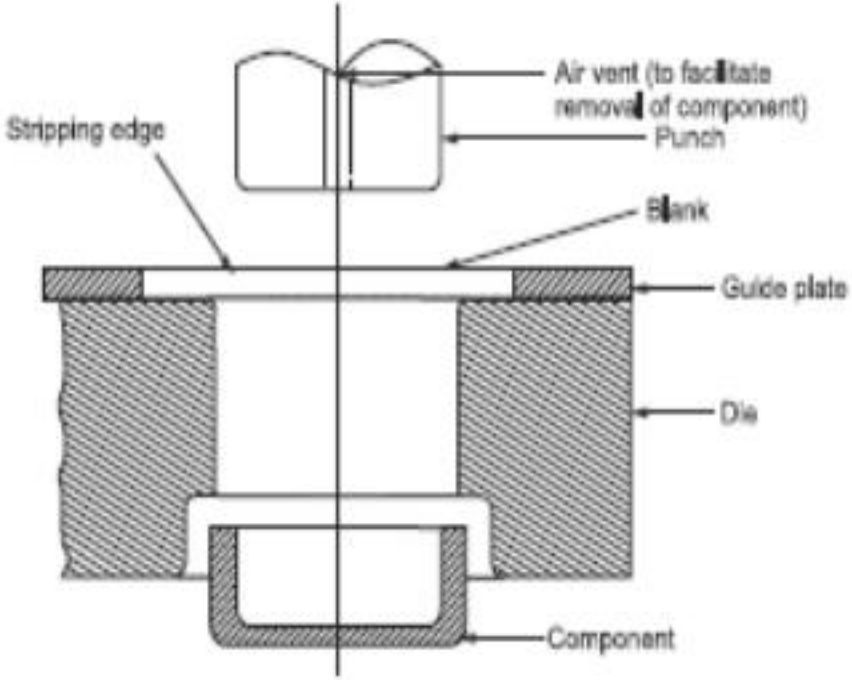

The drawing force F_d (max) is given by:

$$F_d(\max) = \pi\, d\, t\, S\, (D/d - c)$$

where d = shell diameter

t = thickness of the material

S = yield strength of the material

D = blank diameter

C = constrict to cover friction (= 0.6–0.7 for ductile material).

Punching-die Design

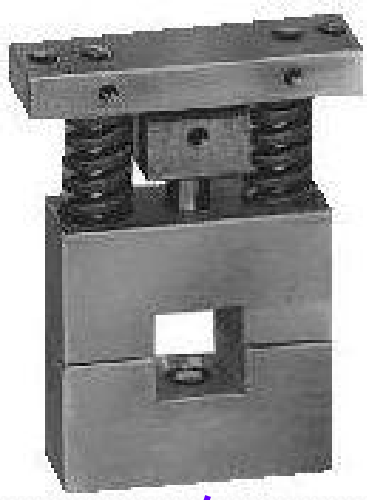

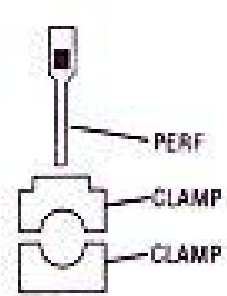

Single–station piercing die: A complete press toc for cutting two holes in work material at one stroke of the press

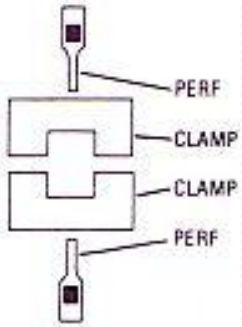

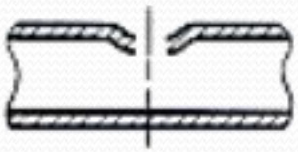

Single dimple

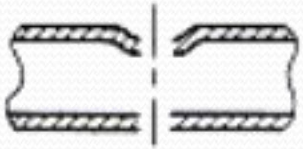

Single dimple (clean hole bottom)

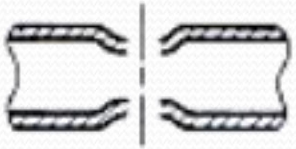

Double dimple

clea

Punching-die Design

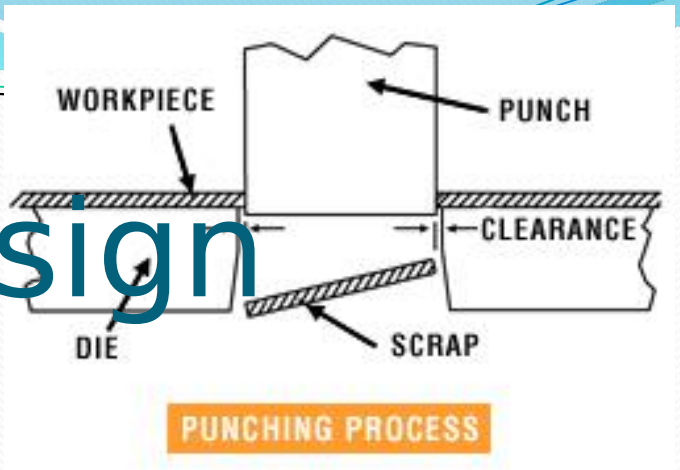

1. Top die shoe
2. Bottom die shoe
3. Guide plate
4. Top back-up block
5. Bottom back-up block
6. Guide pin
7. Punch
8. Punch holder with adjusting plate
9. V-Ring plate
10. Guide bushing
11. Adjusting plate
12. Punch retainer with adjusting plate
13. Ejector
14. Die
15. Piercing punch holder
16. Guide bushing

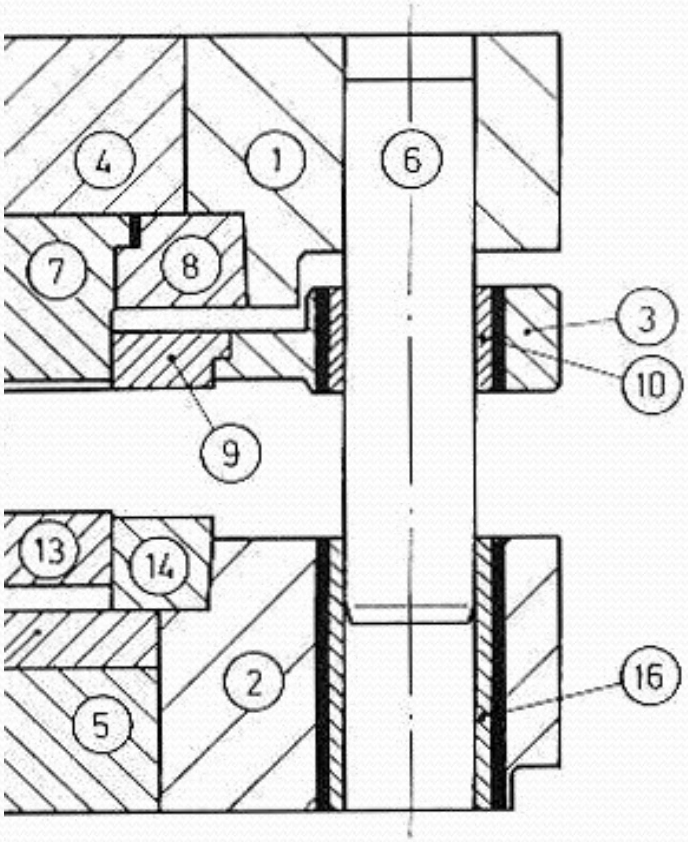

Blanking-die Design

The piercing punch is replaced by the blanking punch.

There are two types of blanking dies:

1- Simple or conventional blanking die

2- Inverted blanking die

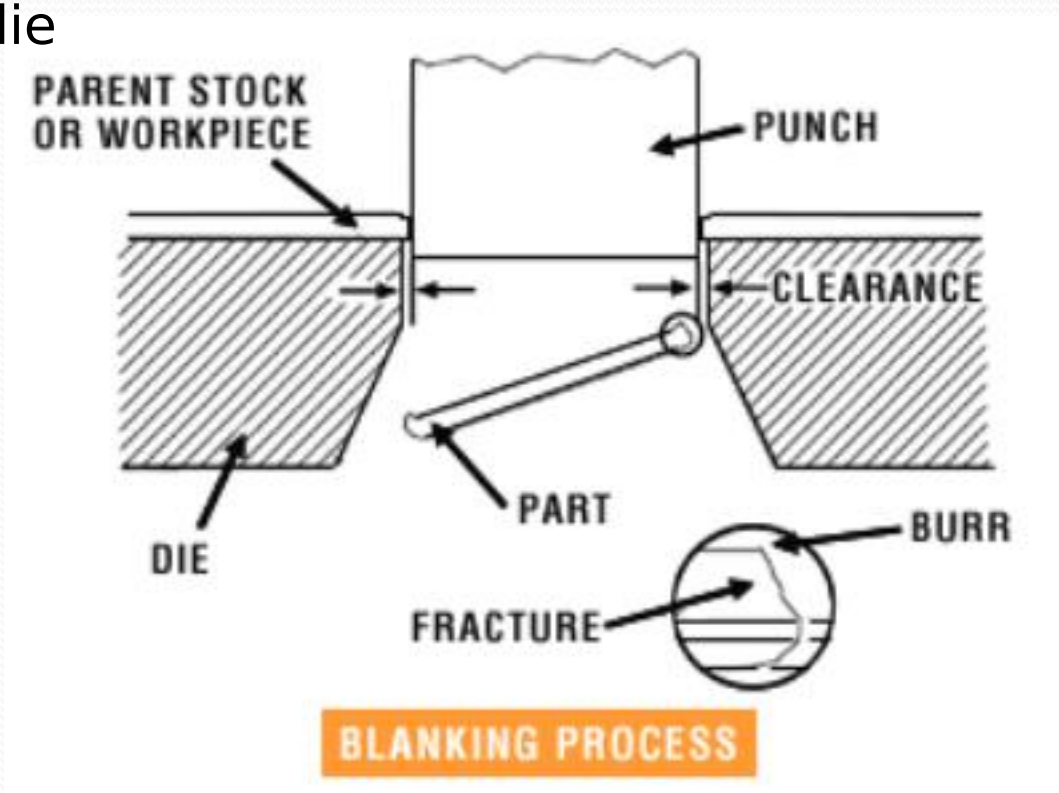

1- Simple Blanking Die

Die is mounted to the lower shoe and punch is mounted to the upper shoe.

Drop-through design: finished blanks drop through the die. Angular clearance in needed to remove the part.

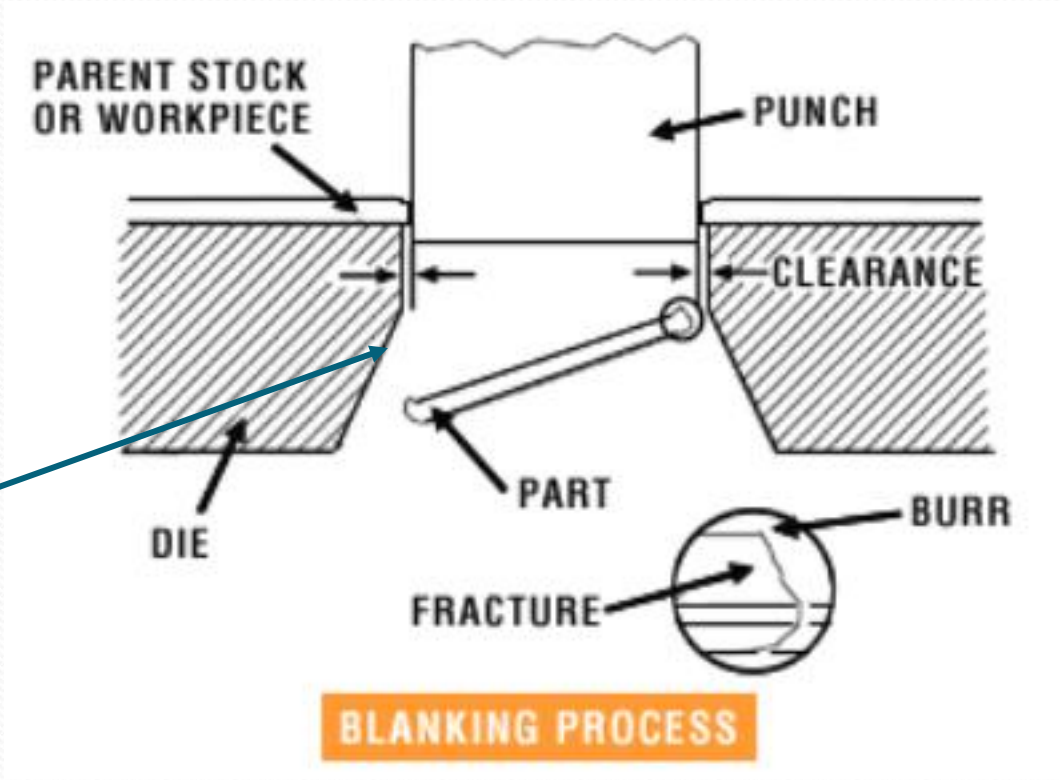

2- Inverted Blanking Die

Used for producing larger blanks,

The die is mounted to the upper shoe,

The punch is mounted to the lower shoe,

No need for angular clearance as part is removed by hand.

The spring-loaded stripper is mounted on the lower shoe (travels upward in stripping the stock from the punch fastened to the lower shoe).

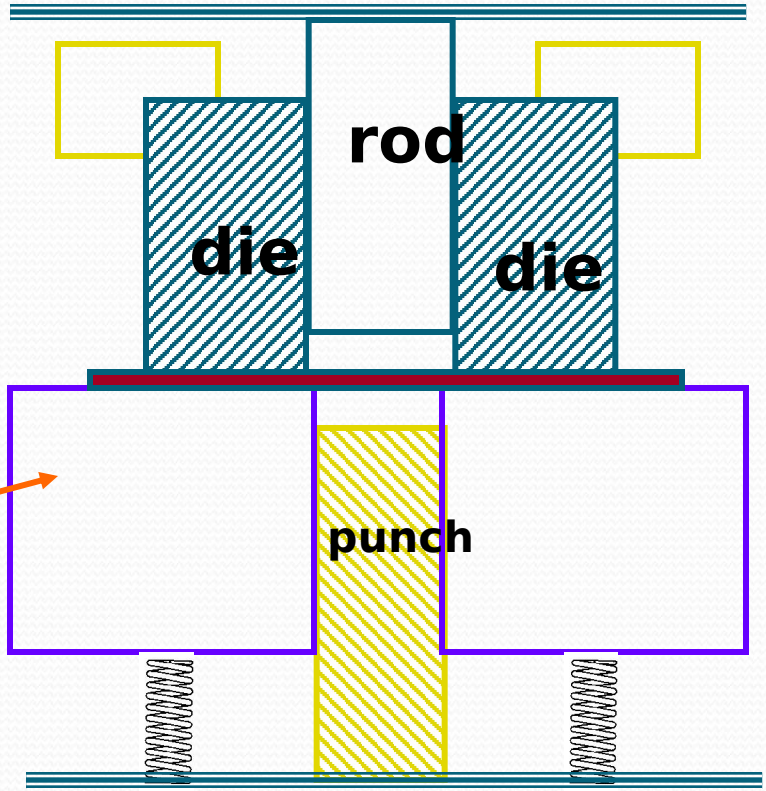

4th ed, page 363

Compound Blanking & Piercing Die

A compound blanking and piercing die is used to pierced blanks, *eg* a washer.

Here both piercing punch and the blanking punch are attached to the upper-die shoe.

The piercing punch contacts the material slightly ahead of the blanking die.

The center hole is cut and outer diameter trimmed in a single-die station in one press stroke.

The material is usually 0.015 *in* $(0.38\ mm)$ cold-rolled steel strip.

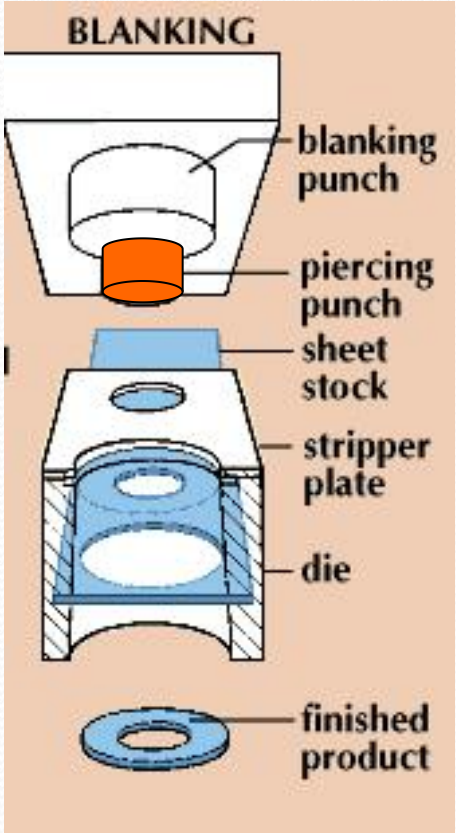

Progressive die

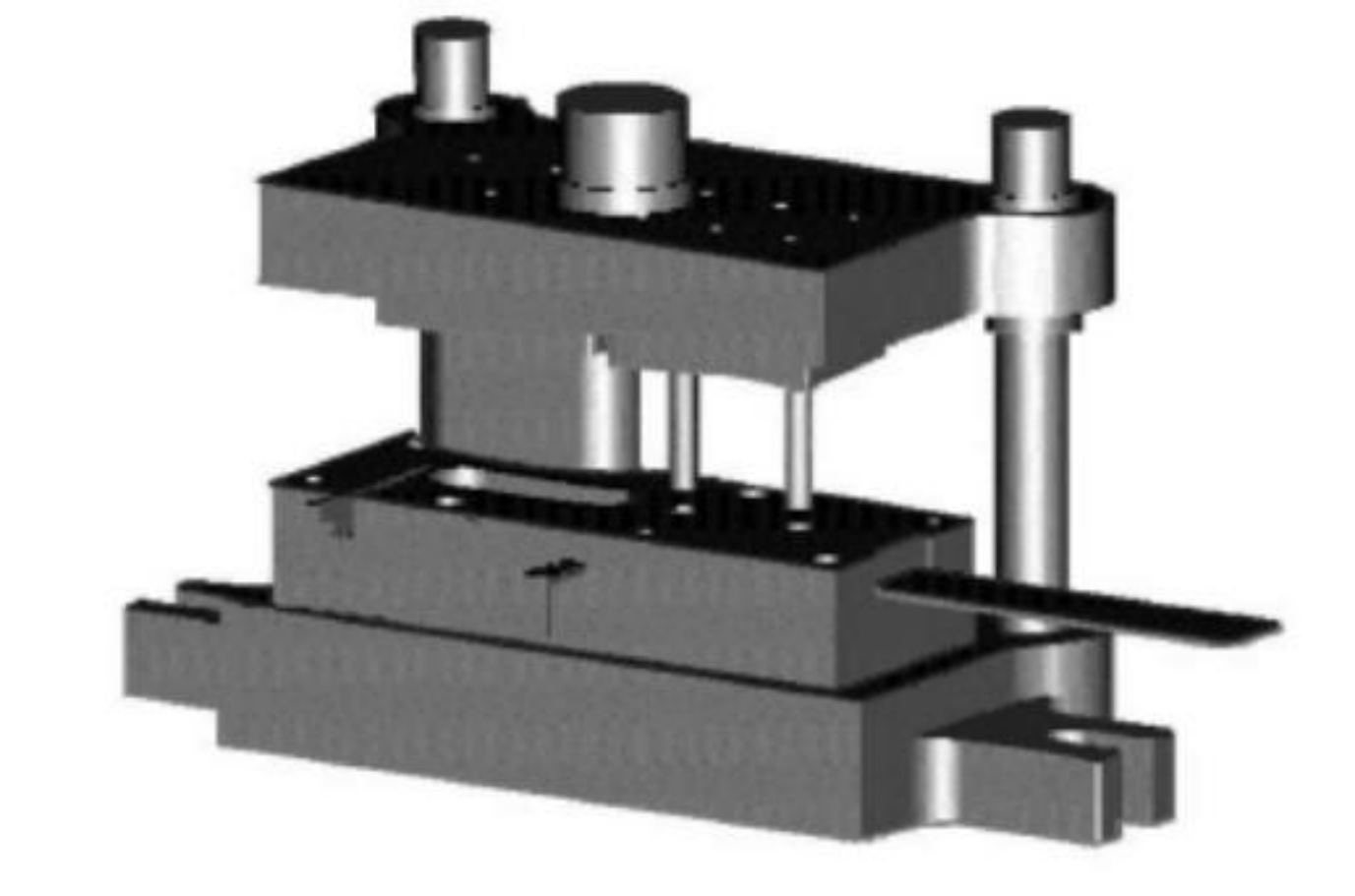

Compound Blanking & Piercing Die

The sheet material is lifted off the blanking punch by a spring-actuated stripper.

The blanks normally remains in the upper die, and is usually removed by knockout (which occurs at the top of stroke).

No angular clearance is needed (results in simpler die construction).

In some cases, a piercing punch is attached to the upper-die shoe and the blanking punch to the lower-die shoe.

Disadvantage:

The part must be removed from the upper die at the top of each stroke. In case of small parts, once knocked out of the upper die, they may be ejected by a timed blast of air.

Test yourself!

What type of blanking die is this? (Simple or inverted)

Although the finished blanks do not drop through the die, but the main feature is that the punch is mounted to the upper shoe and the die to the bottom shoe. So this is a ...

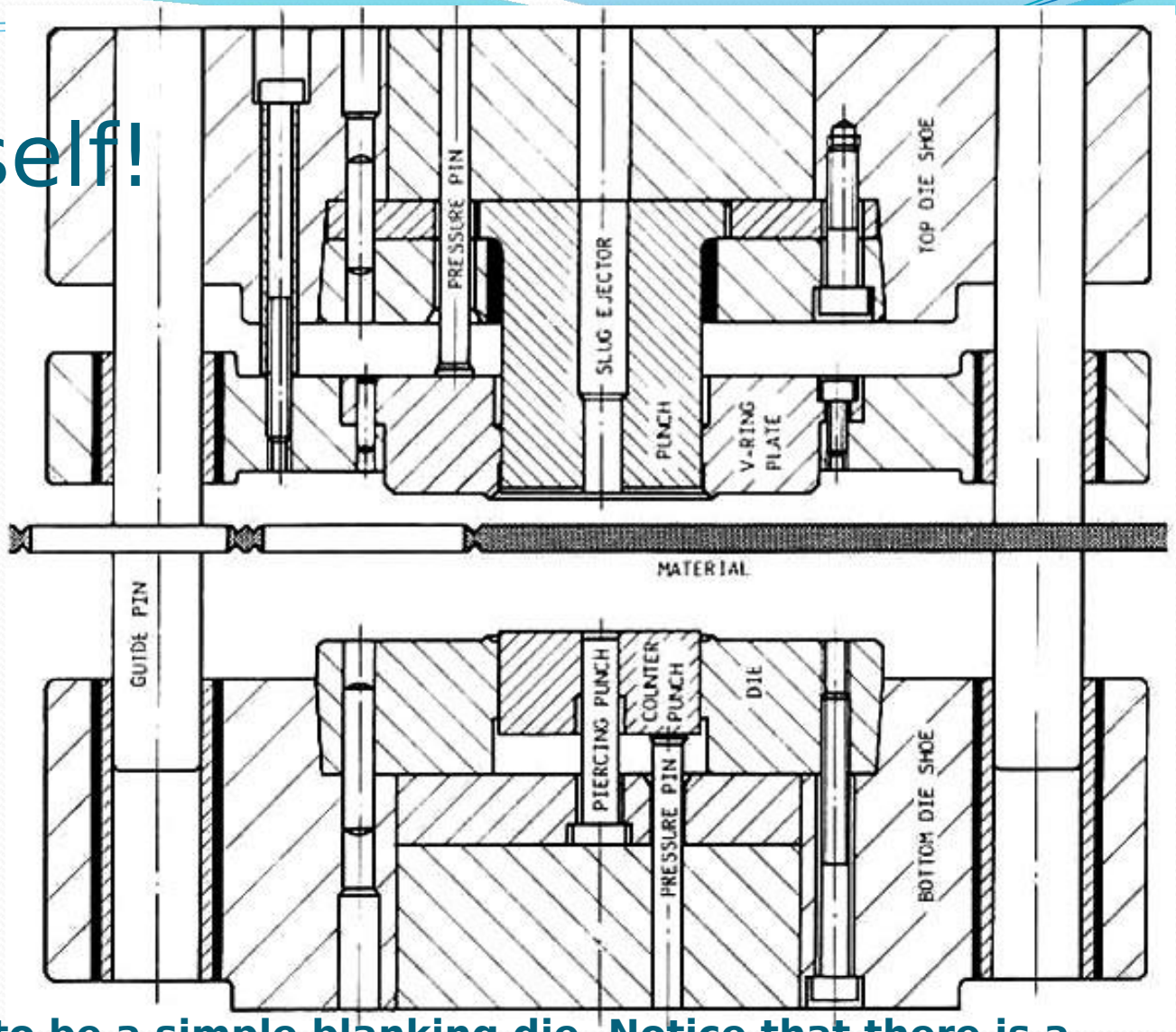

So this seems to be a simple blanking die. Notice that there is a piercing punch at the bottom as well. So this is in fact a compound blanking and piercing die!

Design Elements

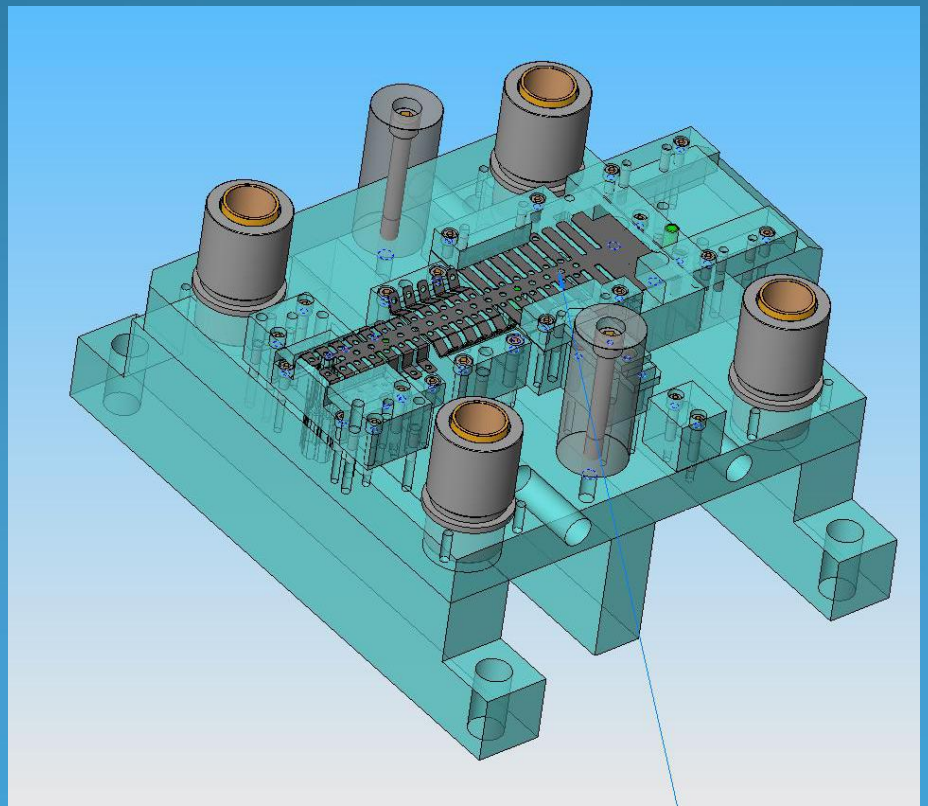

Systems of Length, Area, & Force measurements

In North America, engineering calculations for stamping are carried out using measurements based on the following units:

For length and thickness: Inch,

For shear and yield strength: Pounds per square inch or psi,

For press force: 2000 lb.

Throughout most of the world:

For length and thickness: Meter, centimeter and millimeter

For shear and yield strength: KPa (K N/m^2) or MPa

For press force: Tons or 1000kg (sometimes KN & MN).

Die Block General Design

Overall dimensions will be determined by:

- **Minimum wall thickness required for strength,**
- **by the space needed for screws and dowels and for mounting the stripper plate.**

Depends upon the thickness of the stock to be cut.

Stock	Die	Stock	Die
Thickness *in* (*mm*)	Thickness *in* (*mm*)*	Thickness *in* (*mm*)	Thickness *in* (*mm*)
0.1 (2.5)	0.03 (0.8)	0.6 (15.2)	0.15 (3.8)
0.2 (5.1)	0.06 (1.5)	0.7 (17.8)	0.165 (4.19)
0.3 (7.6)	0.085 (2.2)	0.8 (20.3)	0.18 (4.6)
0.4 (10.2)	0.11 (2.8)	0.9 (22.9)	0.19 (4.8)
0.5 (12.7)	0.13 (3.3)	1.00 (25.4)	0.20 (5.1)
* For each ton per sq in of shear strength			

Die thickness per ton of pressure

Mathematical on

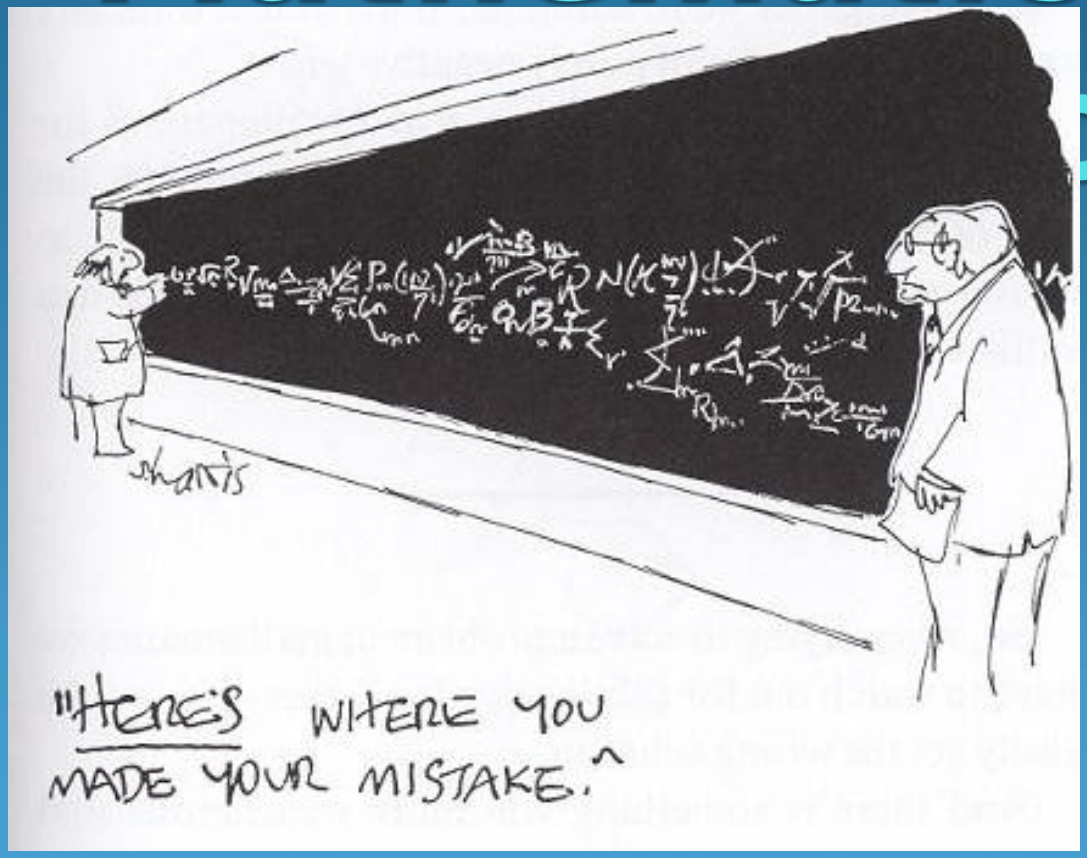

Center of Pressure

Irregularity in the shape of a blank, may result in a bending moment in the press ram and undesirable deflections and misalignment.

This is because the summation of shearing forces on one side of the center of the ram may greatly exceed the forces on the other side.

Center of pressure= Center of gravity of the perimeter of the blank, not the area

A point about which the summation of shearing forces will be symmetrical.

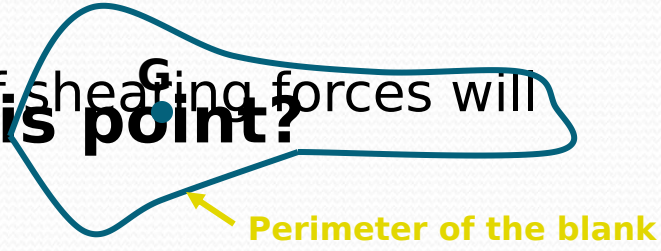

Why is it important to find this point?

The press tool will be designed so that the center of the pressure will be on the central axis of the press ram when the tool is mounted in the press.

Center of Pressure

Calculate the distance X, of the center of pressure C from the axis Y–Y by:

$$X = \frac{L_1 x_1 + L_2 x_2 + L_3 x_3 + L_4 x_4}{L_1 + L_2 + L_3 + L_4}$$

Calculate the distance Y, of the center of pressure C from the axis X-X by:

$$Y = \frac{L_1 y_1 + L_2 y_2 + L_3 y_3 + L_4 y_4}{L_1 + L_2 + L_3 + L_4}$$

Center of Pressure, Example

In the following figure, the elements are shown and numbered 1, 2, 3, etc. Find the center of the gravity.

Element	L	x	y	Lx	Ly
1	4	0	6.25	0	25
2	4.71	1.5	9.25	7.05	43.33
3	3.21	4.00	7.00	12.80	22.4
4	2.5	4	5	10	12.5
5	3	1.5	4.25	4.5	12.75
6	1.57	1	0	1.57	0
Total	18.98			35.92	115.98

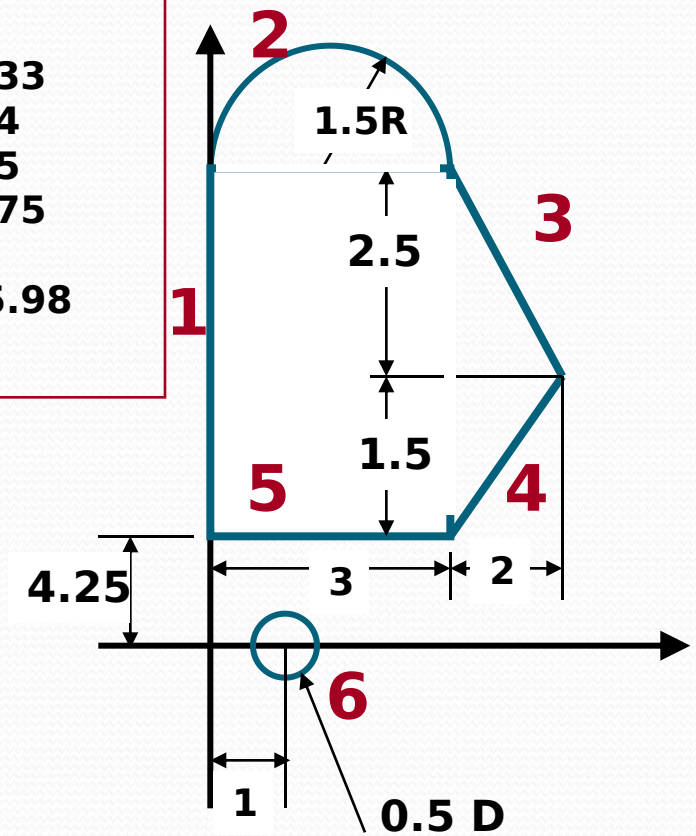

$$\text{For semicircle 2: } \bar{y} = \frac{2r}{p}$$

$$X = \frac{35.92}{18.98} = 1.89in\ (48\ mm)$$

$$Y = \frac{115.98}{18.98} = 6.11in\ (155\ mm)$$

Peak Cutting Force

Important for determining press size (tonnage)

$$F_s = S_s \,.\, L \,.\, t$$

Where
F_s = Shear force
S_s = shear strength of metal
L = length of cut edge
t = stock thickness

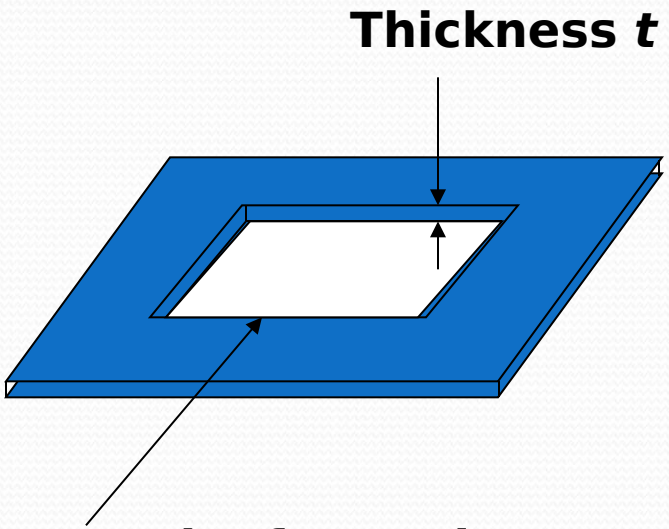

$S_s \approx 0.7\ S_t$

S_t = Tensile strength

$(F = \text{Stress x Area of material cut} = \sigma . A)$

Peak Cutting Force

Shear strength and tensile strength of various materials are written in this table.

TABLE 4-3
Shear and Tensile Strengths

Material	Shear Strength psi	Shear Strength MPa	Tensile Strength psi	Tensile Strength MPa
Aluminum 1100-H14	11,000	75.8	18,000	124.1
Aluminum 20224-T4	41,000	282.7	68,000	468.9
SAE 3240	150,000	1034.2	105,000	723.9
SAE 4130	55,000	379.2	90,000	620.5
SAE 4130	65,000	448.2	100,000	689.5
SAE 4130	75,000	517.1	125,000	861.8
SAE 4130	90,000	620.5	150,000	1034.2
SAE 4130	105,000	723.9	180,000	1241.1
Stainless (18-8)	70,000	482.6	95,000	655.0
Steel (0.1 C)	45,000	310.3	60,000	413.7
Steel (0.25 C)	50,000	344.7	70,000	482.6
Copper-hard	35,000	241.3	50,000	344.8
Brass-hard	50,000	344.7	78,000	537.8
Tin	6,000	41.4	5,000	34.5
Zinc	20,000	137.9	24,000	165.5

Stripping Forc

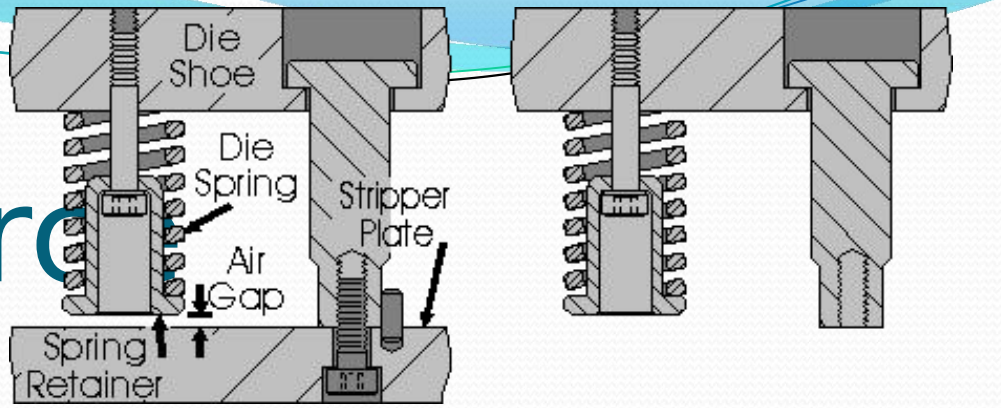

http://www.diesupplies.com/catalog/accessories/35b

A properly designed tool needs to have a method for holding the work while the punch is pulled back through the material.

This stripping procedure can be either by a fixed-bridge or spring-loaded stripper.

Thinner material deforms easily when punch is withdrawn from a hole, so the spring loaded stripper should be used.

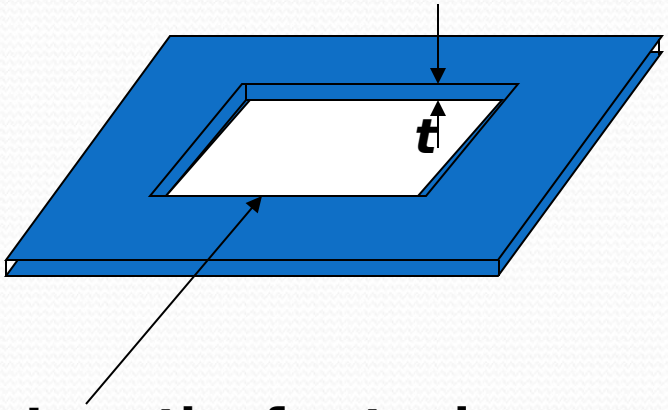

Length of cut edge or *L* = perimeter of this rectangular shape

Stripping Force

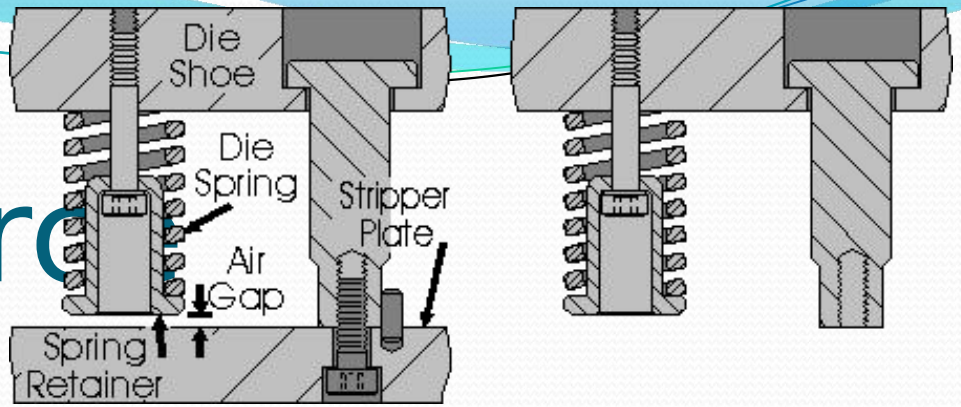

Stripping force depends on:

Type of material being cut,

Area of the cut,

Clearance between punch & die,

Spring position, etc.

Rough empirical equation:

$$F = 1.5 L\, t$$

L and t are in in and F in ton.

$$F = 20{,}600 L\, t$$

L and t are in mm and F in kN.

Press Tonnage

The sum of all the forces required to cut and form.

In many cases, the stripping forces must be added to the cutting force.

This is while the spring-loaded stripper is used. Because, the springs are compressed while cutting the material.

Any other spring forces for forming, draw pads, etc will have to be

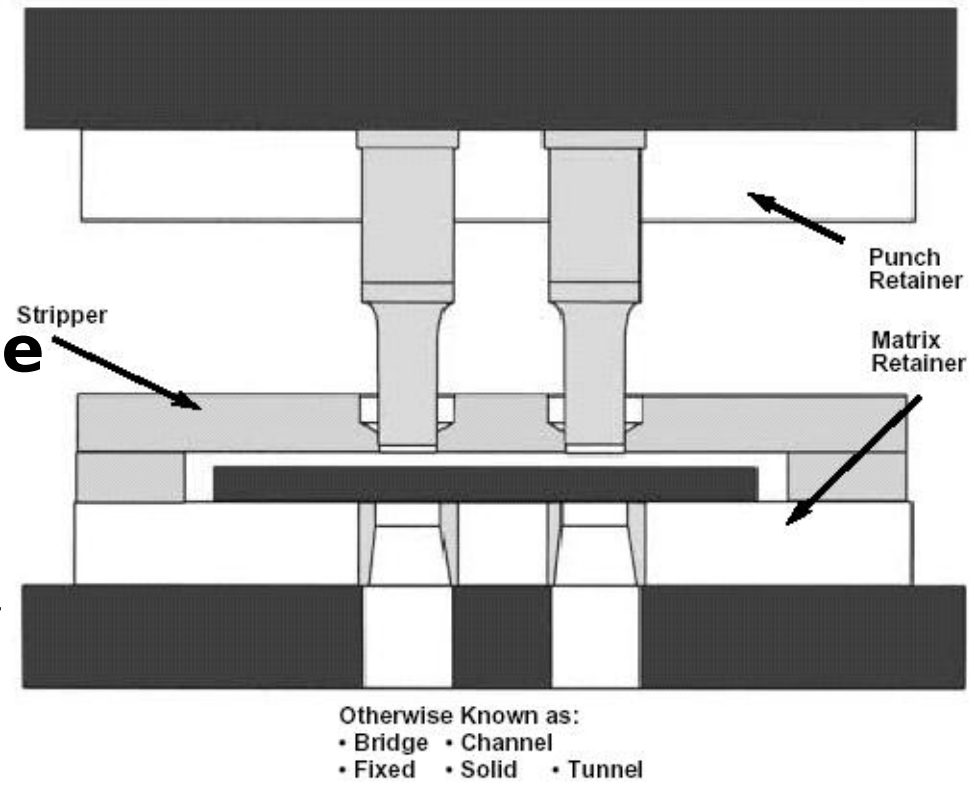

Reducing Cutting Forces

Cutting forces are characterized by very high forces exerted for very short periods. It is desirable to reduce these forces.

The likelihood of design difficulties and outright tool failure increases if:

- we have punch contours of large perimeters,
- we have many smaller punches,
- high tonnage requirements are concentrated in a small area.

Reducing Cutting Forces

Two methods reduce cutting forces and smooth the shock impact of heavy loads:

1- <u>Adding shear to the die or punch equal to one-third of the material thickness</u> reduces the tonnage required by 50% for that area being cut with shear applied.

2- By <u>adjusting the height</u> of the punches so they differ in length by one-third the material thickness. (they can cut in sequence rather than all at once). This reduces the tonnage to one-third!

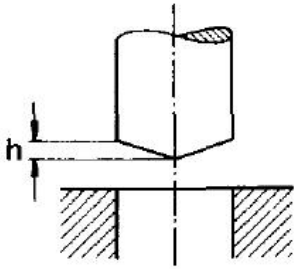

Pier

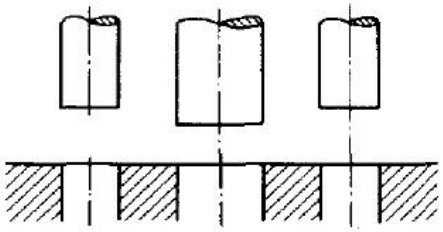

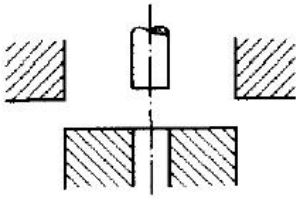

Test yourself!

Name the major components of this die and mention how many relative motions exist.

The entire die is actuated by a mechanical press that moves the die up and down. The press is also responsible for feeding the material through the die, progressing it from one station to the next with each stroke.

Clicking on the picture will open the

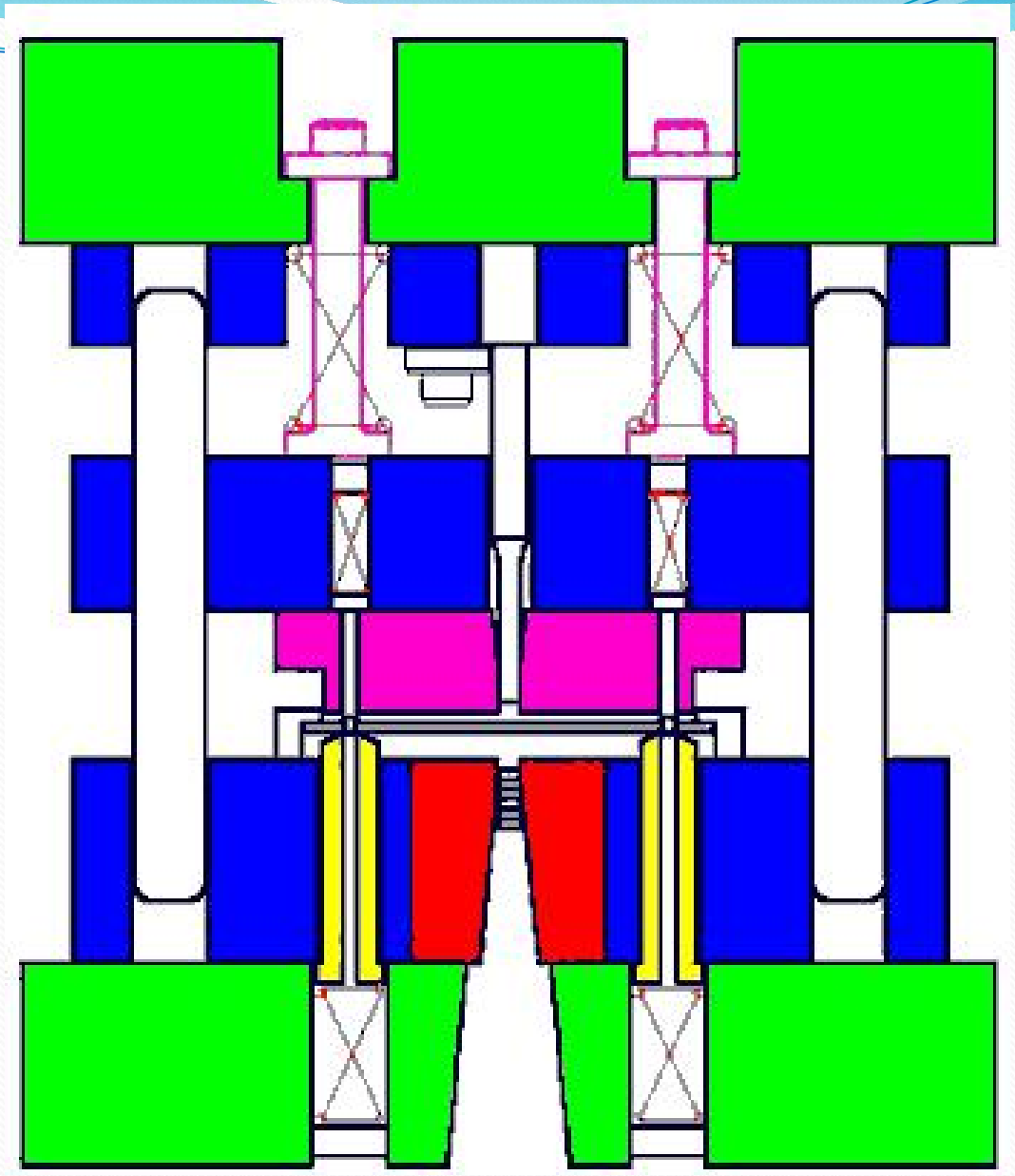

Blanking die design

1. Component, Drawing, Specification

Diameter $d = 10$ mm

Thickness, $t = 5$ mm

Material-Carbon steel

Shear strength of carbon steel, 's' = 40 kg/mm²

Fig. 7.1

2. Strip layout

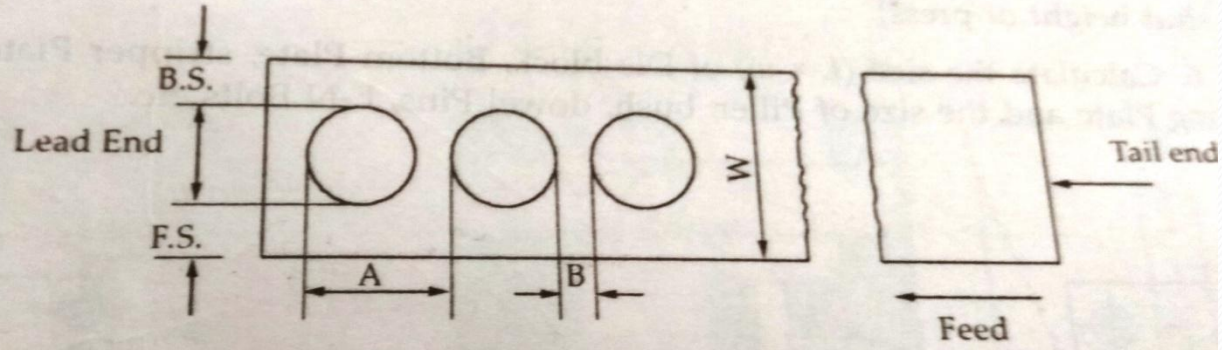

Fig. 7.2

Where B.S = Back scrap

F.S = Front scrap

A = Advance

B = Bridge scrap

w = Width of strip

Now thickness, $t = 5$ mm

F.S = 5 mm

A = Dia + B = 20 + 5 = 25 mm

B = (minimum) equal to thickness =.5 mm

w = Dia + B.S + F.S

= 20 + 5 + 5 = 30 mm.

Calculate the cutting Force '*F*'

$F = L\,t\,S$

ere L = length of cutting edge

t = thickness

S = shear strength

$L = \pi D$ (For round shape)

$F = \pi \times 10 \times 5 \times 40$

$= 6283.4$ Kg ≈ 6.28 tonnes

$F \approx 6.5$ tonn

Blanking die design

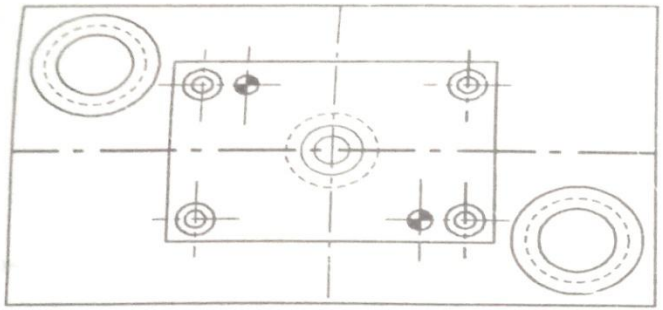

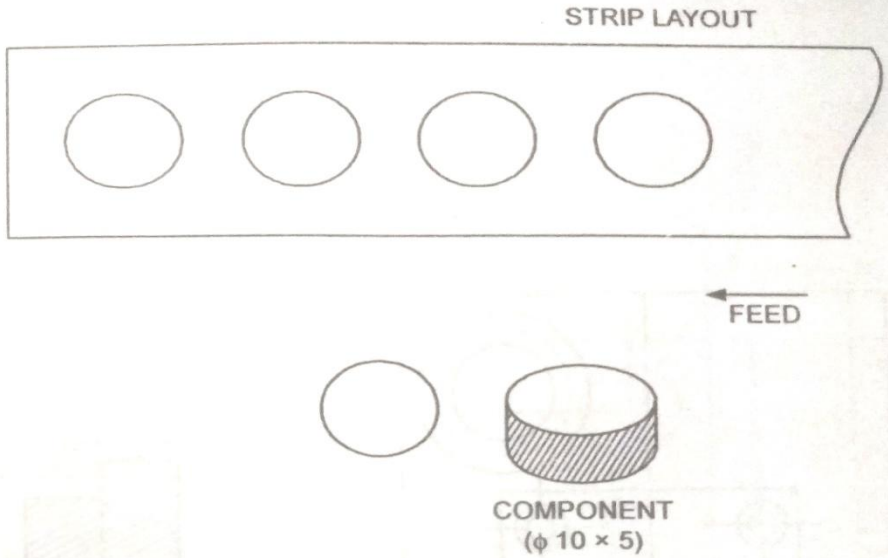

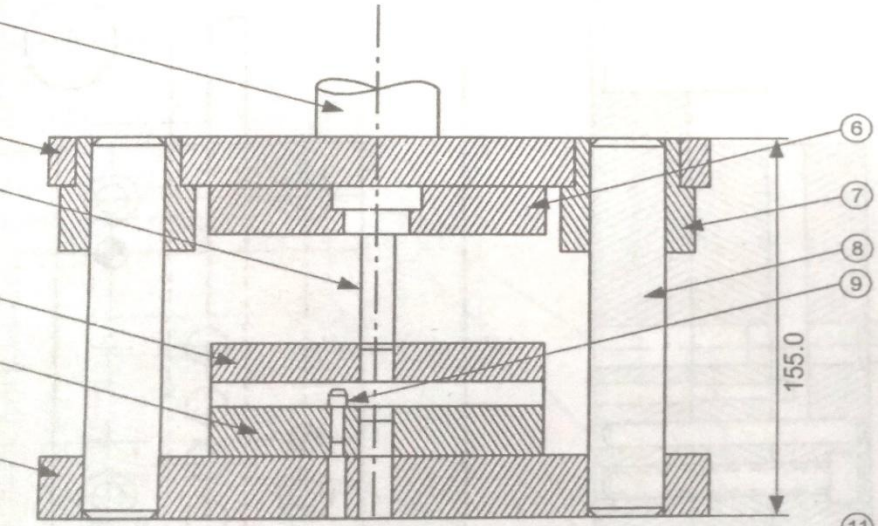

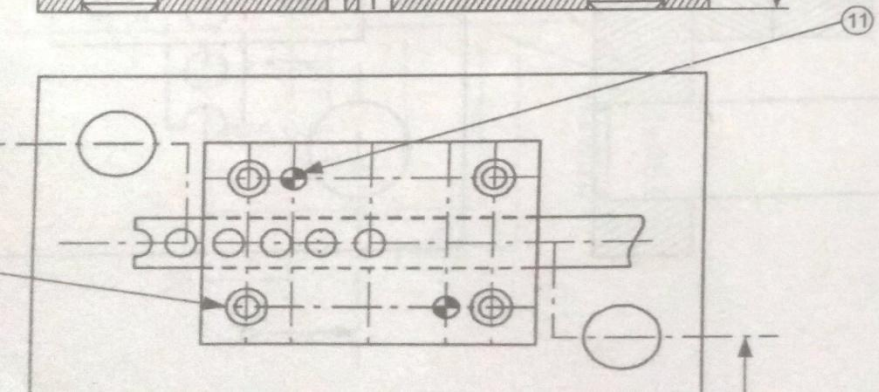

S.NO	DESCRIPTION	QTY.	SIZE	MATERIAL
12	L-N BOLT	9		
11	DOWELL PIN	4	ϕ8×64	SS
10	SHANK	1		HS
9	STOP PIN	1		HS
8	PILLER	2		
7	BUSH	2		
6	PUNCH HOLDING PLATE	1	110×80×20	HS
5	PUNCH	1		HCHCr
4	TOP PLATE	1	220×130×20	HS
3	STRIPPER PLATE	1	110×80×25	HS
2	DIE BLOCK	1	110×80×20	HCHCr
1	BOTTOM PLATE	1	220×130×25	HS

BILL OF MATERIAL

DATE	
APPROVED	A. KUMAR
CHECKED BY	A. KUMAR
DRAWN BY	SATYA MARADI
SCALE	BLANKING DIE
DWG NO	

S.NO.	DESCRIPTION	QTY.	SIZE	MATERIAL
12	L-N BOLT	9		
11	DOWELL PIN	4	ϕ8×64	SS
10	SHANK	1		HS
9	STOP PIN	1		HS
8	PILLER	2		
7	BUSH	2		
6	PUNCH HOLDING PLATE	1	110×80×20	HS
5	PUNCH	1		HCHCr
4	TOP PLATE	1	220×130×20	HS
3	STRIPPER PLATE	1	110×80×25	HS
2	DIE BLOCK	1	110×80×20	HCHCr
1	BOTTOM PLATE	1	220×130×25	HS

BILL OF MATERIAL

Top plate

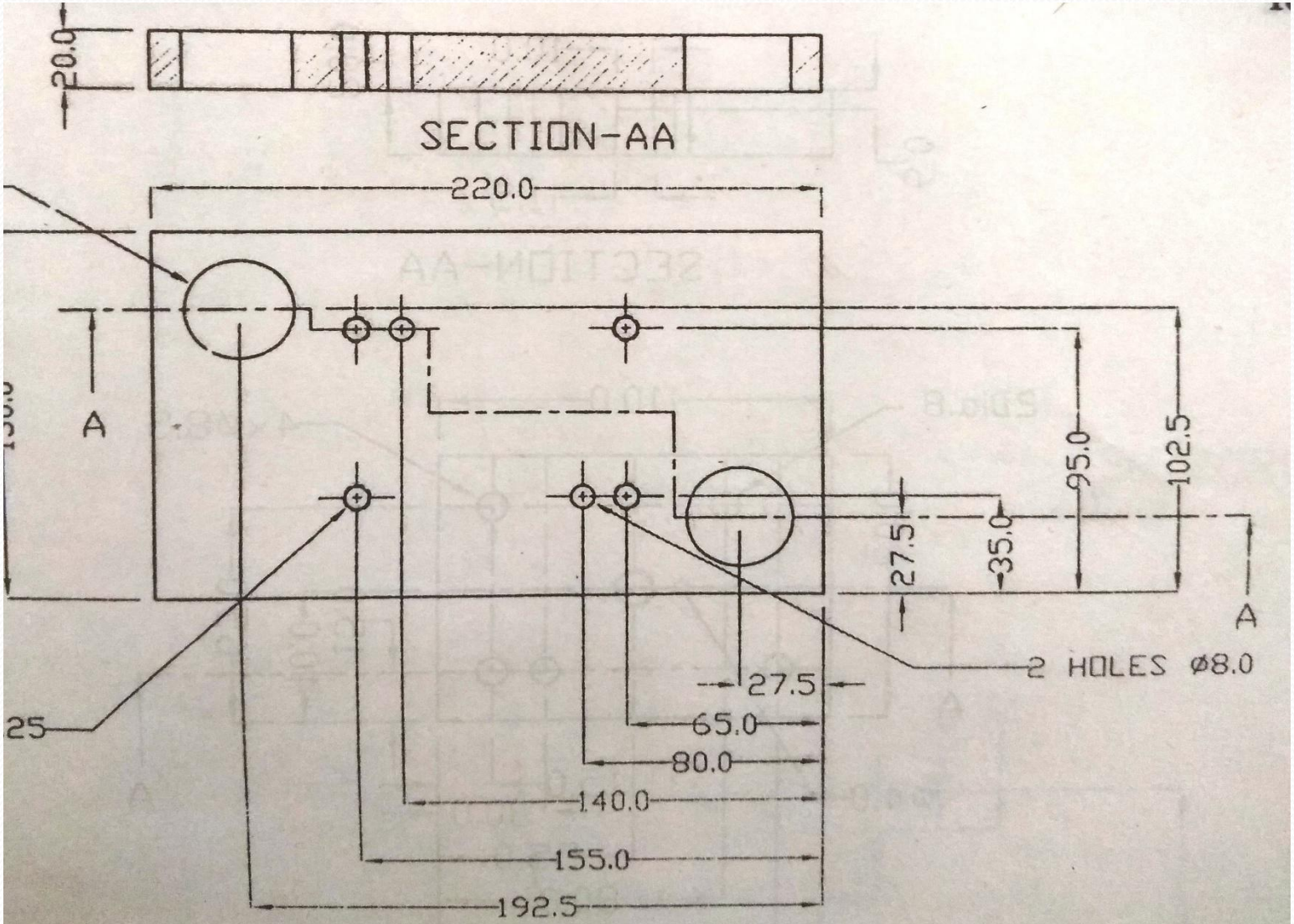

Fig. 7.5. Top plate.

Bottom plate

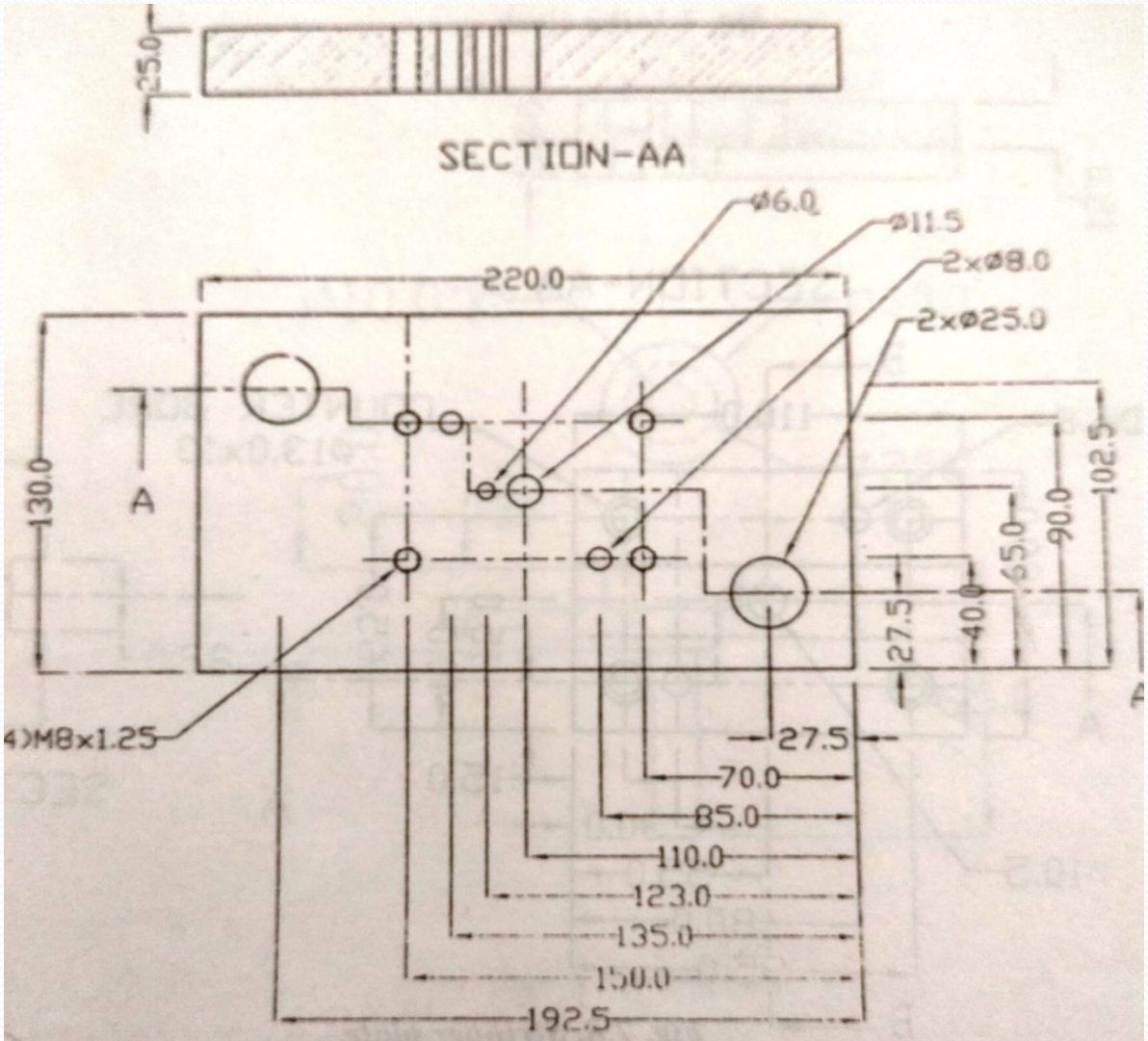

Fig. 7.6. Bottom plate.

Die block

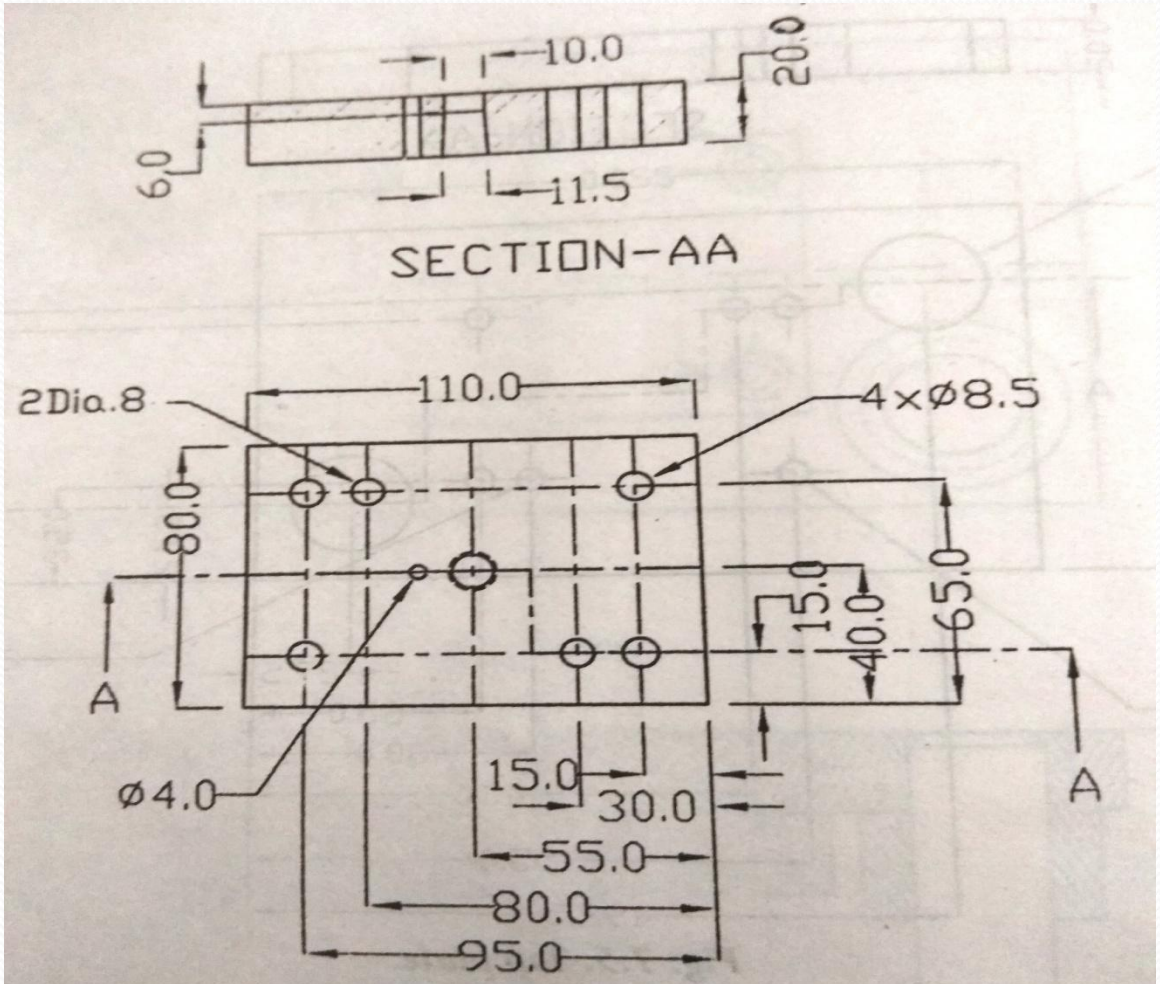

Fig. 7.7. Die block.

Punch plate

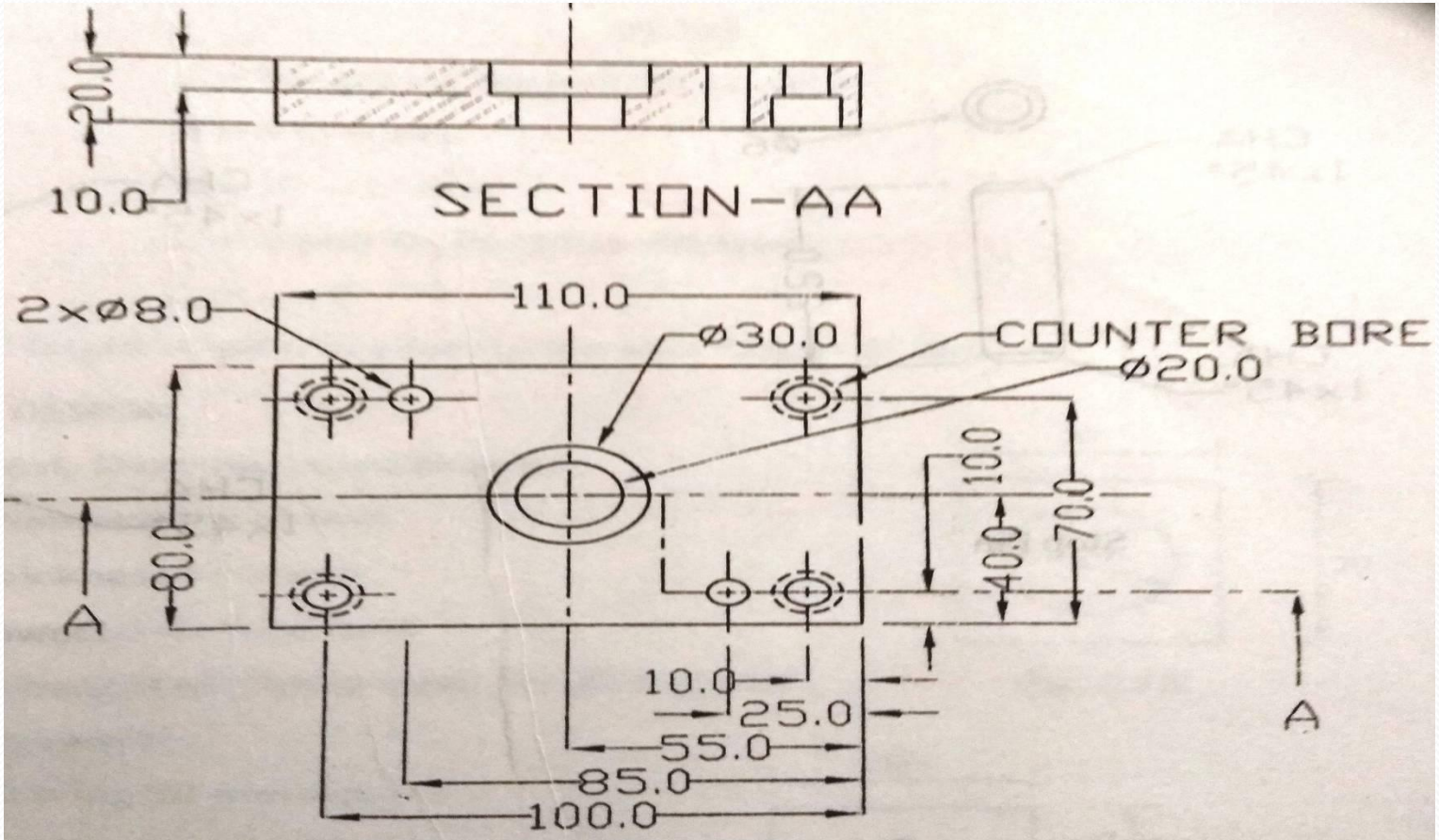

Fig. 7.9. Punch plate.

Punch

The maximum allowable punch length:

$L_m = \pi D/8\ (E.D/fs.t)^{1/2}$

Where

D = Diameter of punched hole

fs = Shear stress

t = Material thickness

E = Modulus of elasticity of punch material

Where

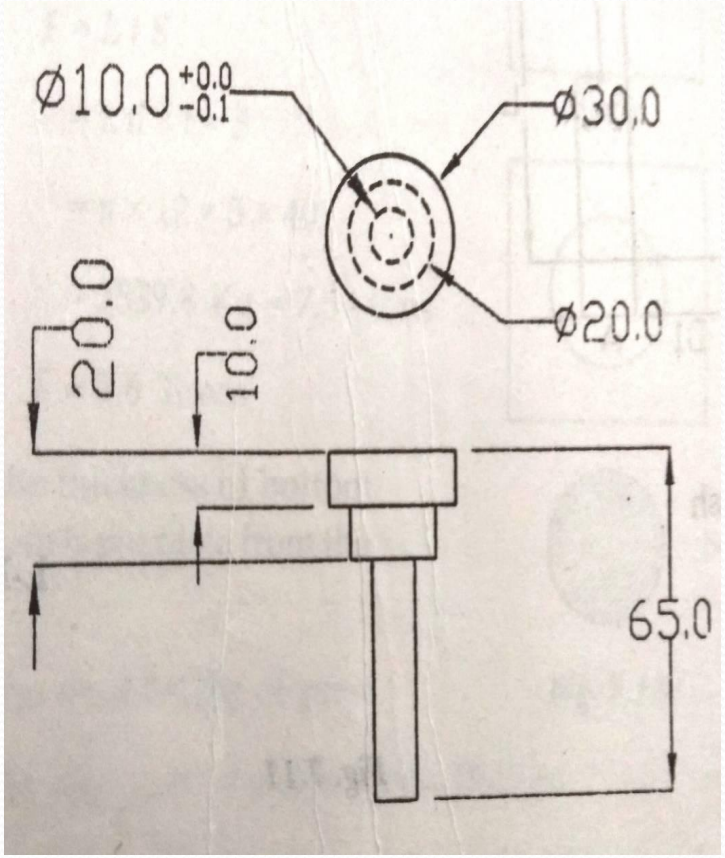

Dowel

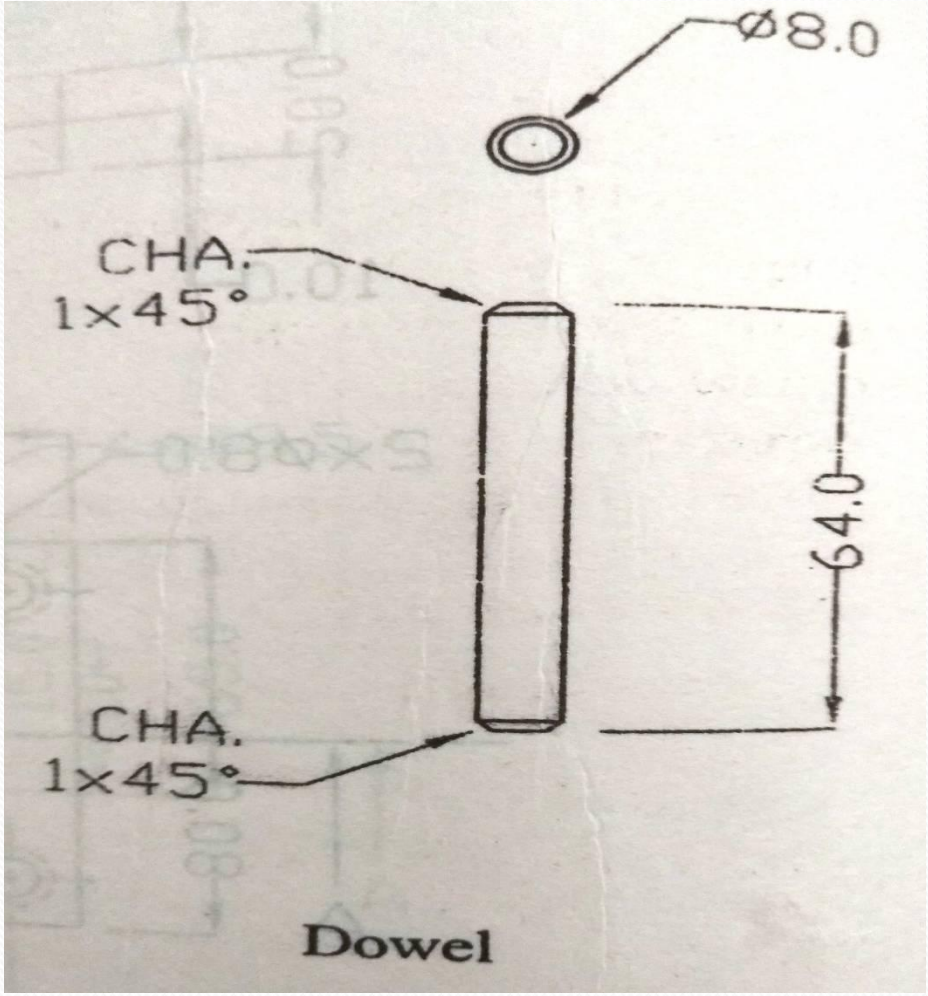

Bush

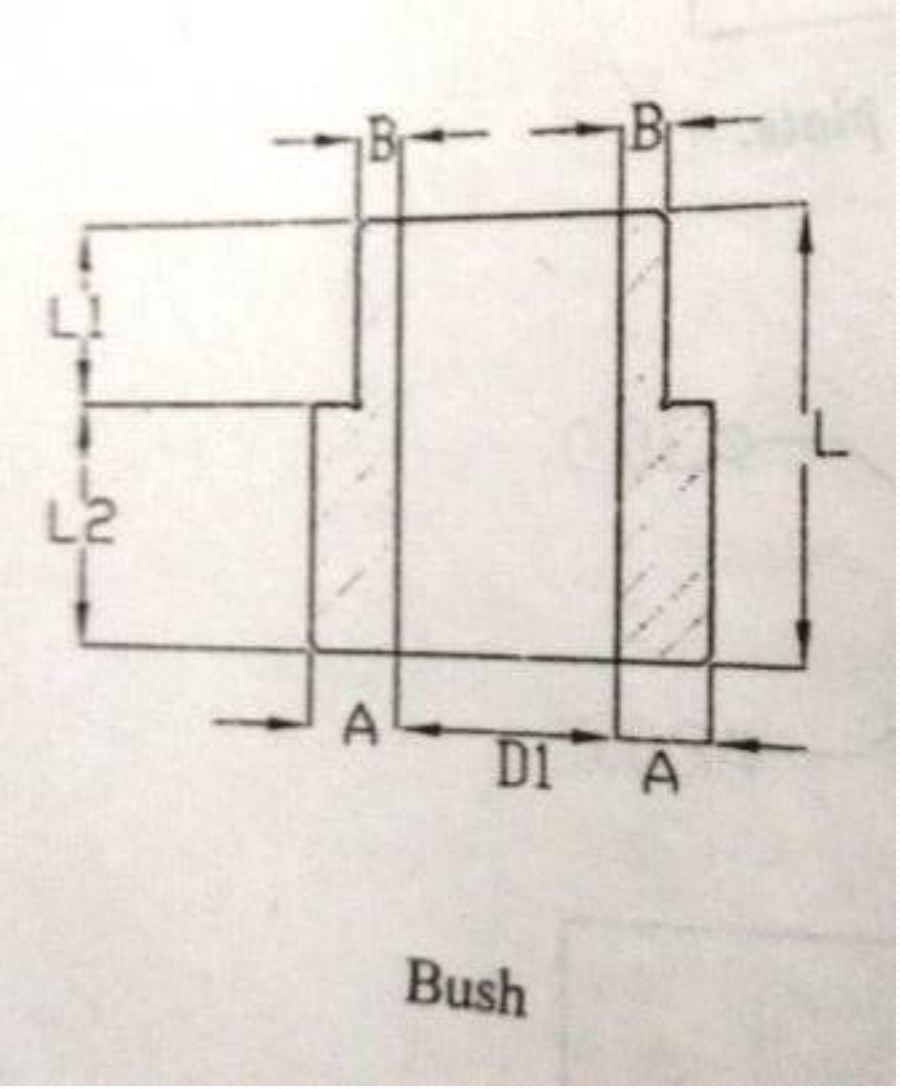

DESIGN OF PROGRESSIVE DIES

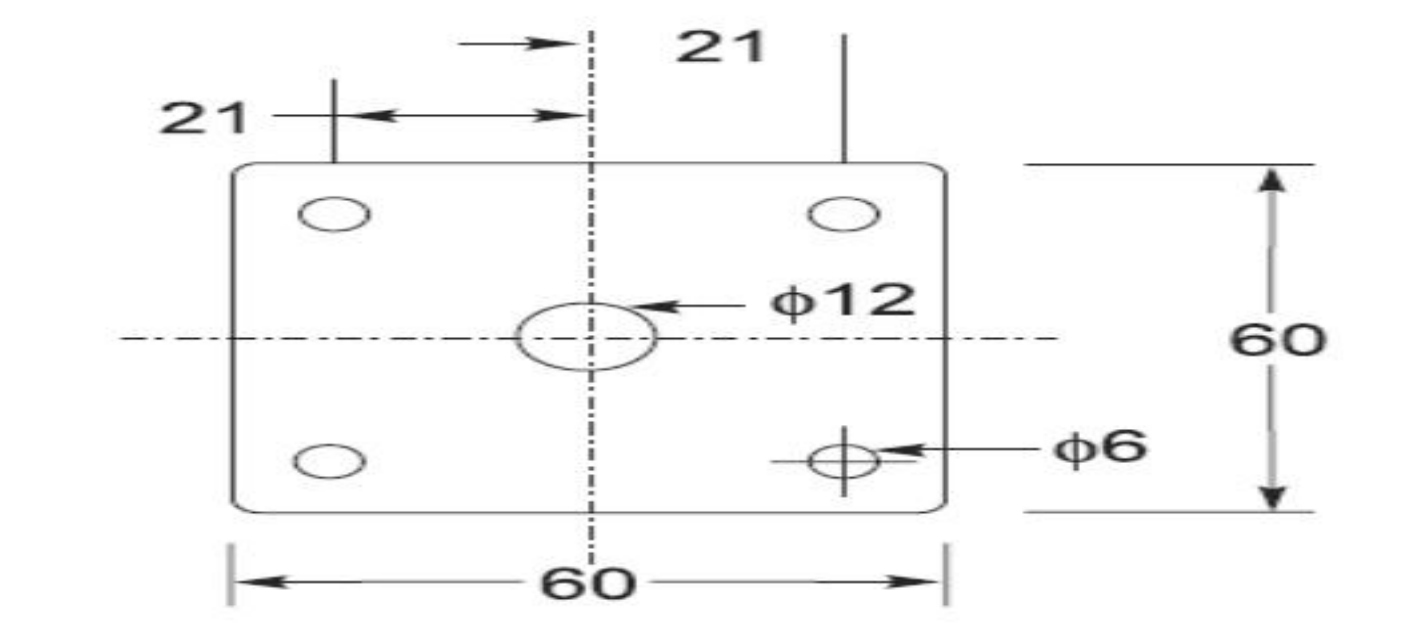

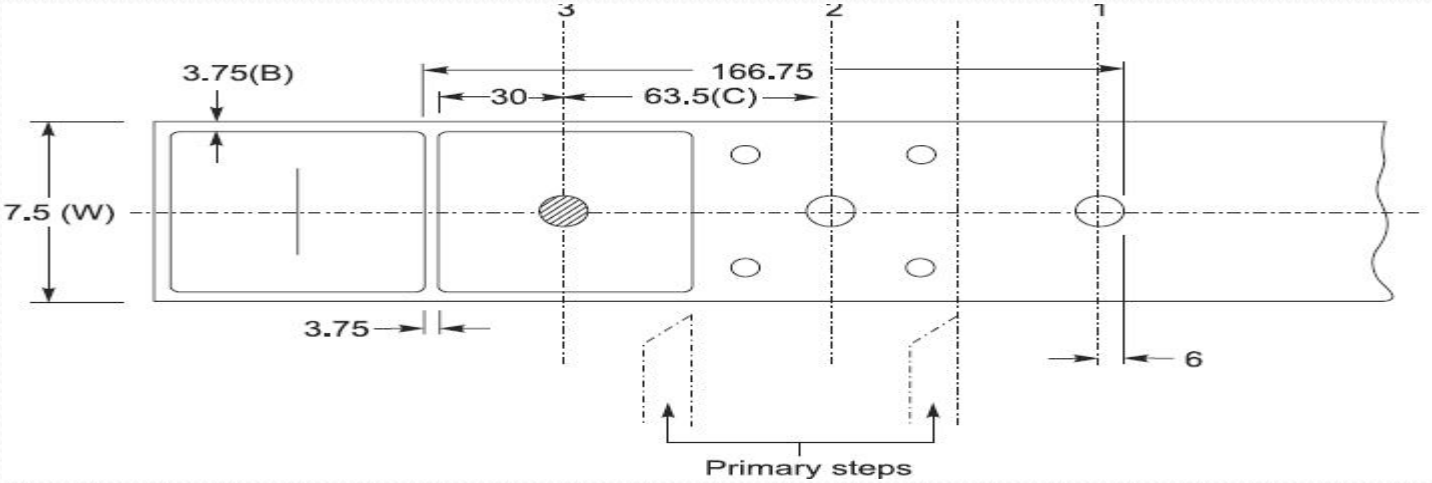

Clearance, $B = 1.25t = 3.75$ mm

Width of the strip, $W = 60 + 2B = 67.50$ mm (say 68 mm).

The Lead or Advance, $C = 60 + B = 63.75$ mm (say 64 mm).

P = 395 × 40 = Perimeter of the cut length of the blank × $3t$ = 28.4 tonnes

Width of the die

Width of the die is given by: Blank size + twice the Clearance on either side

60 + 62 = **122 mm**

Length of die is given by: 2 × 64(C) + 30 + 6 + 2 × 31(clearance on either side) = **226 mm.** Hence, the size of the die plate will be **122 × 226 × 38**.

Punch size: 60 – 10% × 3 = 59.7 mm

The shut height of the die set is given as:

Top bolster thickness + punch holder and backing plate thickness put together
+ clearance of 10 mm between the bottom of the punch holding plate and the stripper plate
+ stripper plate thickness and the clearance for strip movement
+ die plate thickness
+ die shoe thickness
+ bottom bolster thickness
= 1.25 × 38 + 25 + 10 + (19 + 4.5) + 38 + 38 + 1.75 × 38
= 249 mm or **250 mm**

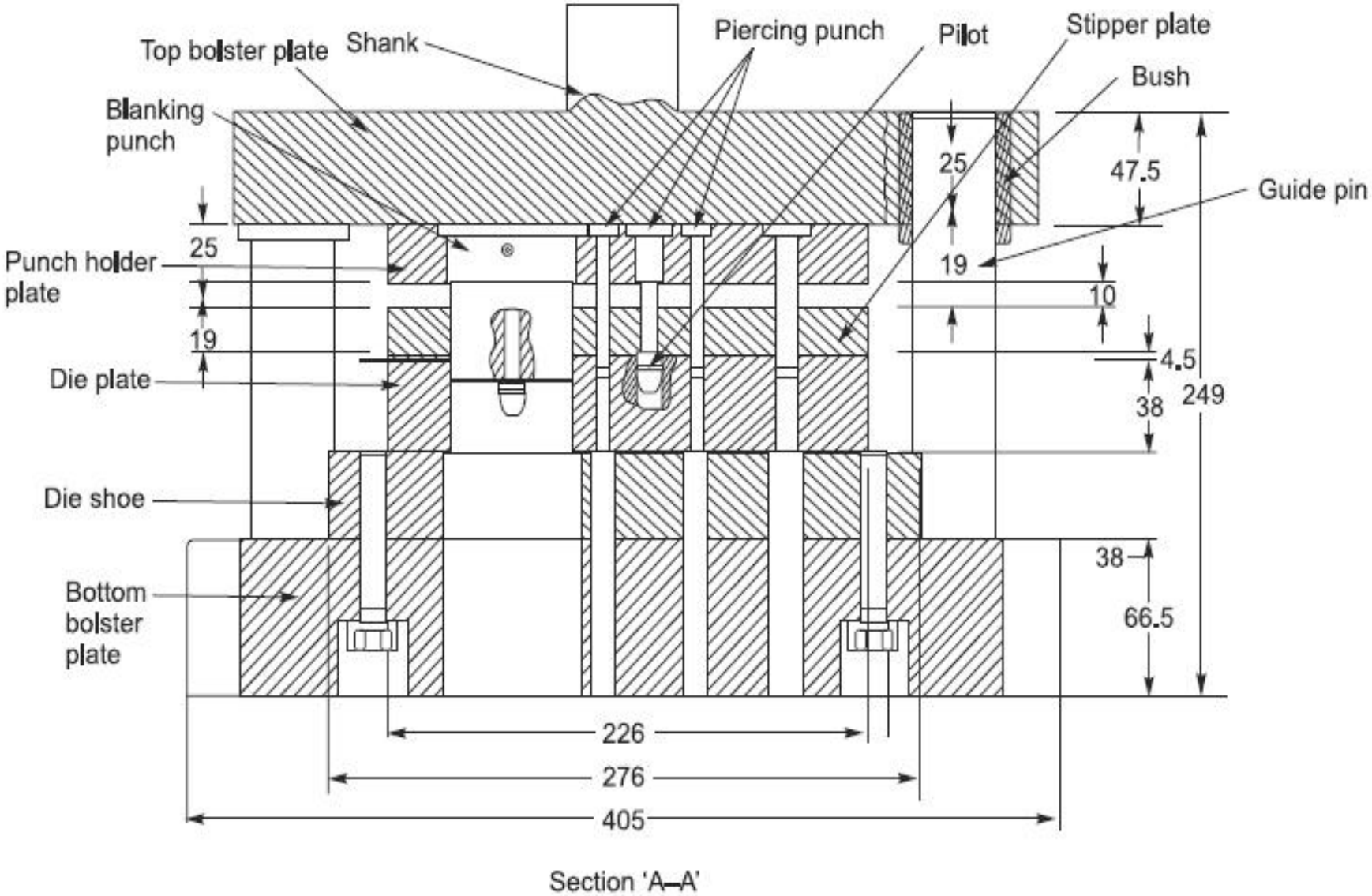

Fig. 4.9 Sectional View of a Progressive Die

PUNCH DESIGN

The punch must withstand the maximum blanking or piercing pressure

They should not deflect during operation

Deflection of punches may be avoided by making the body diameter of punch larger than cutting diameter

Small punches may require punch support to prevent breakage

PUNCH DESIGN

Punch plates serve to hold, position and strengthen the punch

Piercing punches should not be smaller in diameter than the thickness of the stock they are to pierce

Always avoid designing punches that would have more than 4 in. of unguided length

PUNCH DESIGN

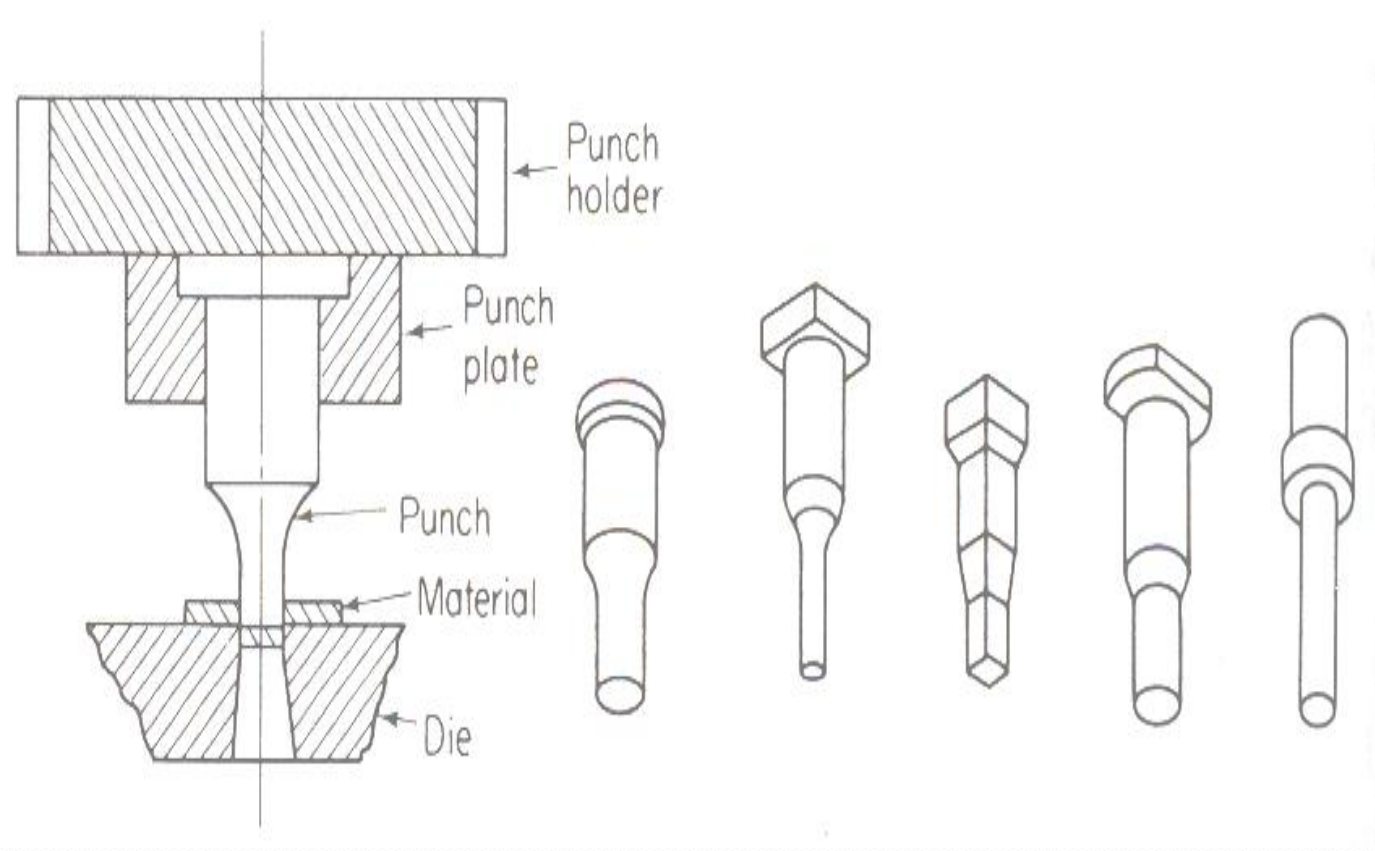

PUNCH DESIGN

PLAIN PUNCHES:

They are simply a block of hardened tool steel shaped to conform to the cutting contour

Screws and dowels secure plain punches

Plain punches must be large enough in area to allow for screws and dowels

Screw and dowel holes should be located at least 1 ½ to 2 times the screw or dowel diameter from the cutting edge

PUNCH DESIGN

PLAIN PUNCHES:

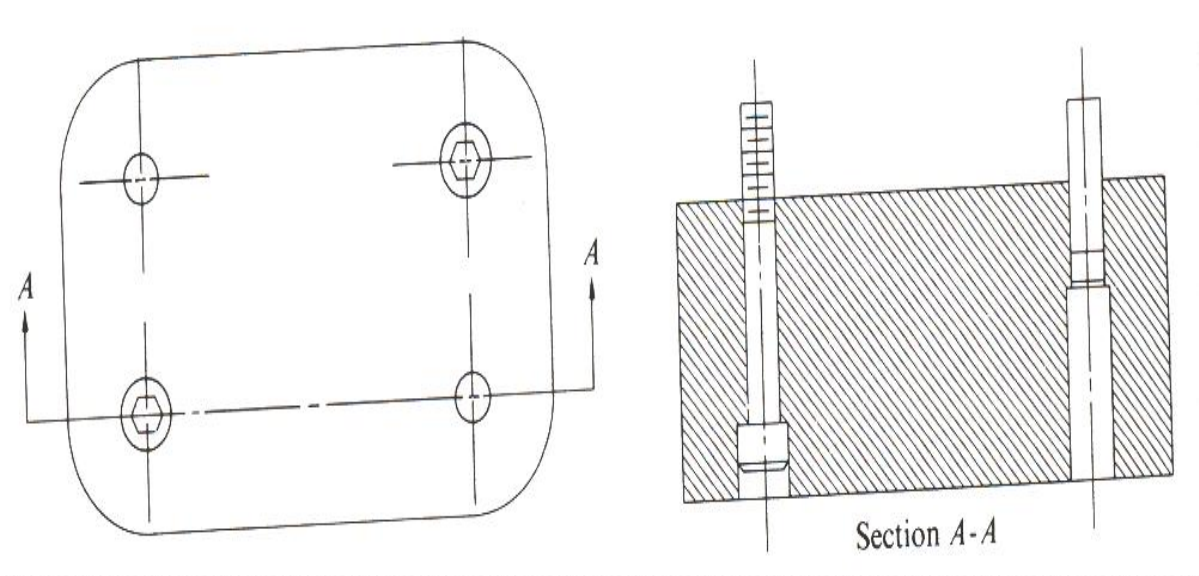

PUNCH DESIGN

PLAIN PUNCHES:

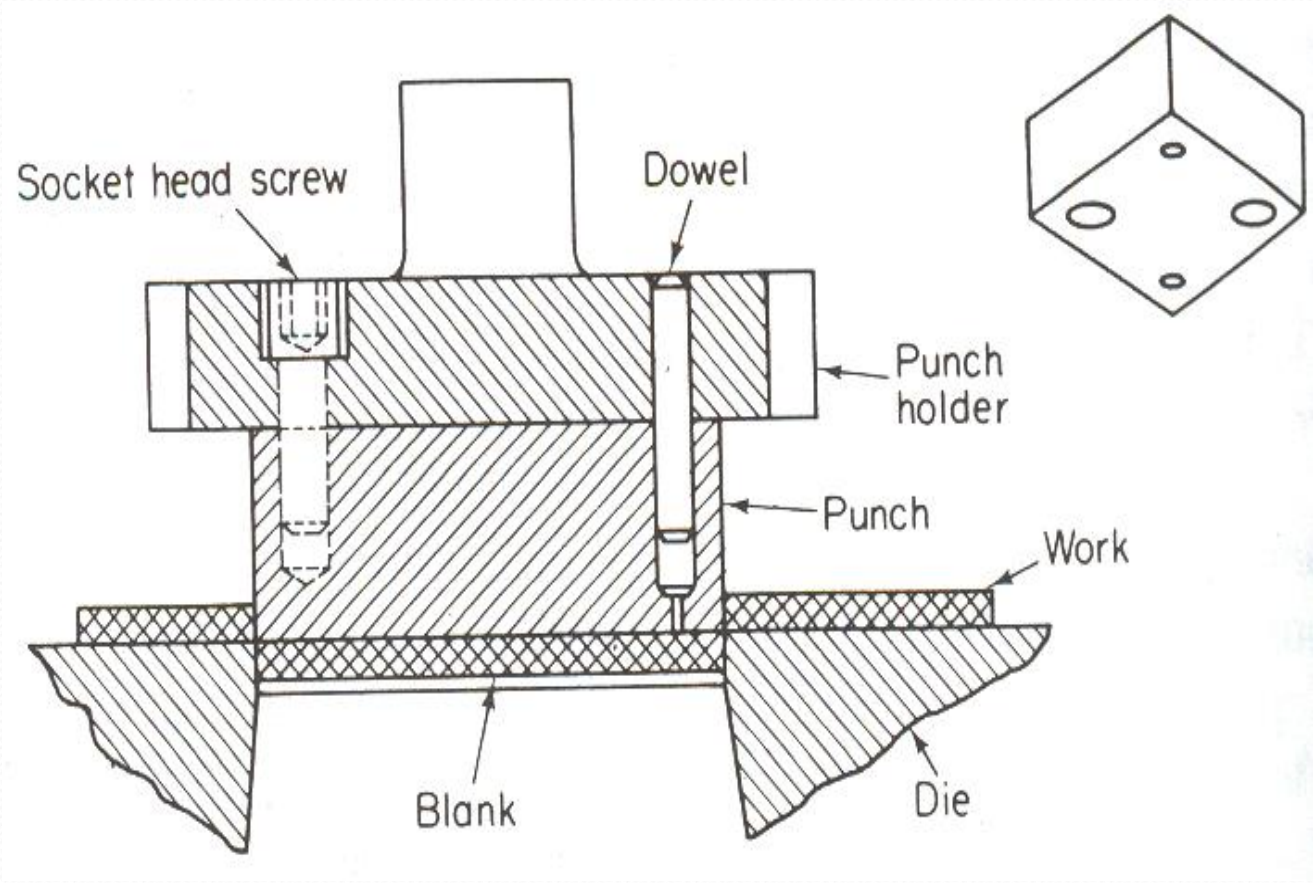

PUNCH DESIGN

PEDESTAL PUNCHES:

- Constructed by machining in such a manner that leaves a flange around the base of the punch
- This punch always has a base area larger than its cutting face area
- Its major advantage is stability caused by the large base and solid construction
- Cutting forces are dispersed through the large base, so used for heavy cutting loads

PUNCH DESIGN

PEDESTAL PUNCHES:

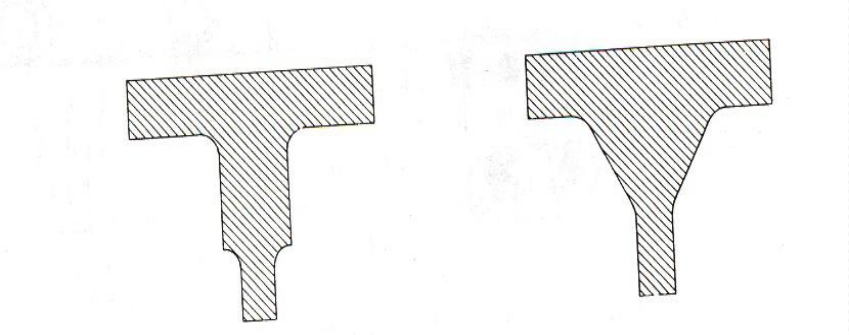

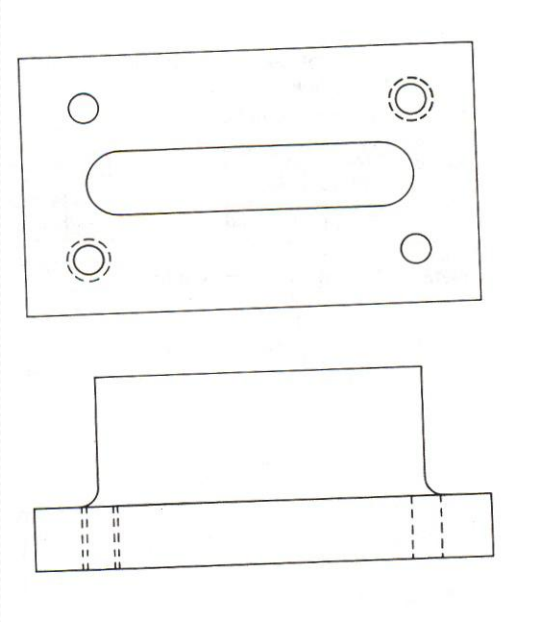

PUNCH DESIGN

PUNCH SHEDDERS:

In piercing and blanking, sometimes, slug or blank clings to the punch face called '*slug pulling*'

Another factor of slug pulling is lubricant

Heavy lubricants make slugs cling to punch face

Slug pulling caused by heavy lubricants can be reduced by using lower viscosity lubricant

Another method is to use shedders

PUNCH DESIGN

PUNCH SHEDDERS:

Spring–actuated shedder pins are located in the center of the punch

Air pressure may also be used to prevent slug pulling

This method is more complicated and also tends to blow lubricant away from cutting areas

PUNCH DESIGN

PUNCH SHEDDERS:

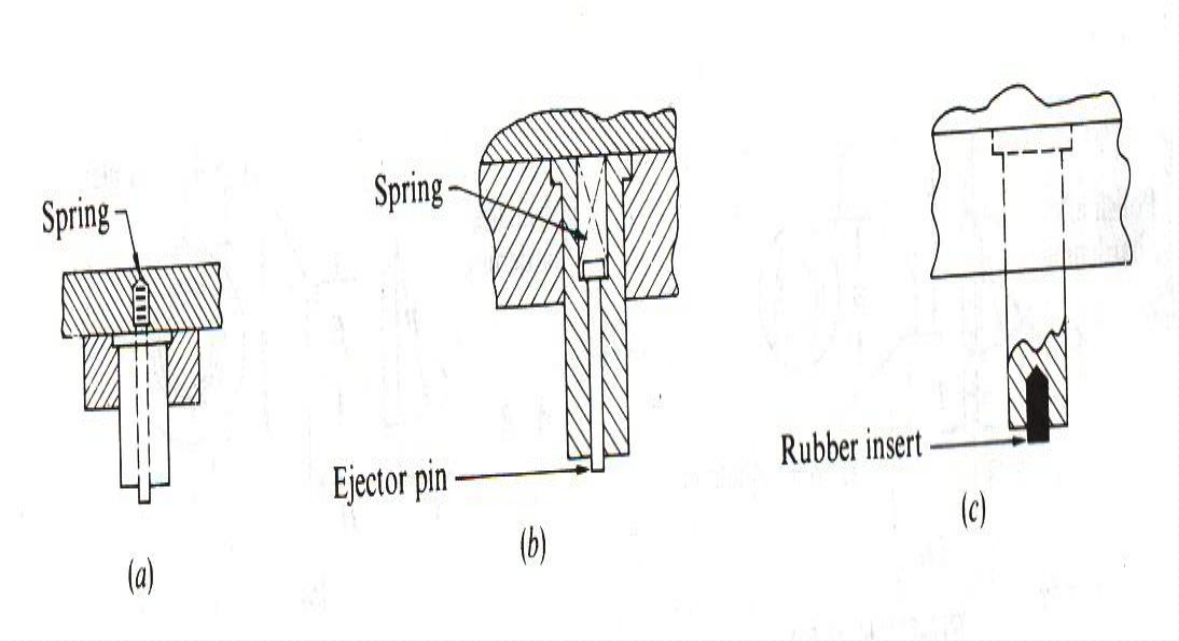

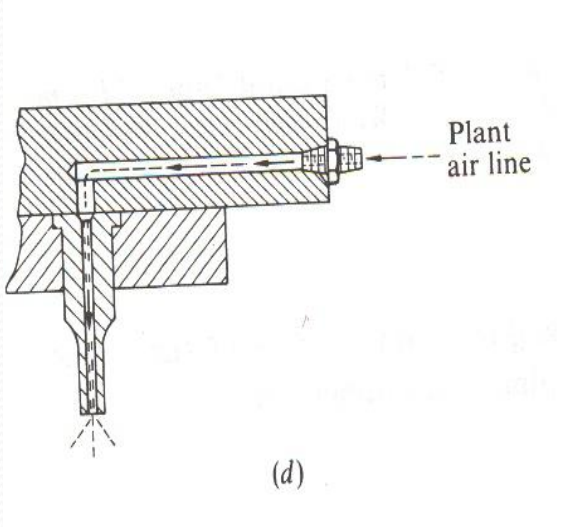

PUNCH DESIGN

The maximum allowable punch length:

$L_m = \pi D/8\ (E.D/f_s.t)^{1/2}$

Where

D = Diameter of punched hole

fs = Shear stress

t = Material thickness

E = Modulus of elasticity of punch material

Where

D/t = 1.1 or higher

KNOCKOUTS

In normal operations the slug clings to the die wall because of spring back in the blank or slug

Knockouts are used to remove workpieces that adhere to the die opening

The upper end of the knockout registers against the knockout bar of the press which pushes the shedder down so that the workpiece is pushed back

KNOCKOUTS

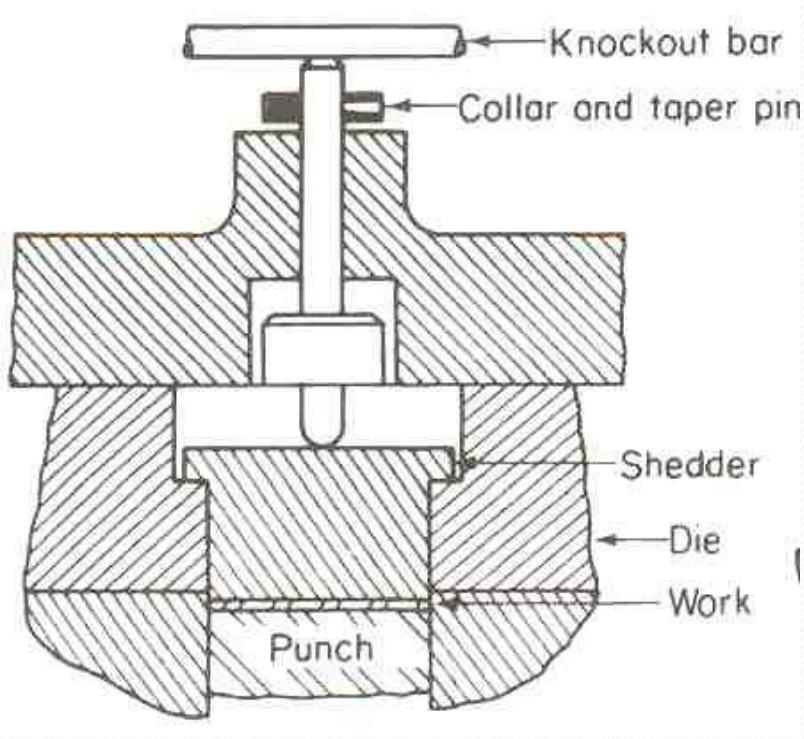
Knockout bar
Collar and taper pin
Shedder
Die
Work
Punch

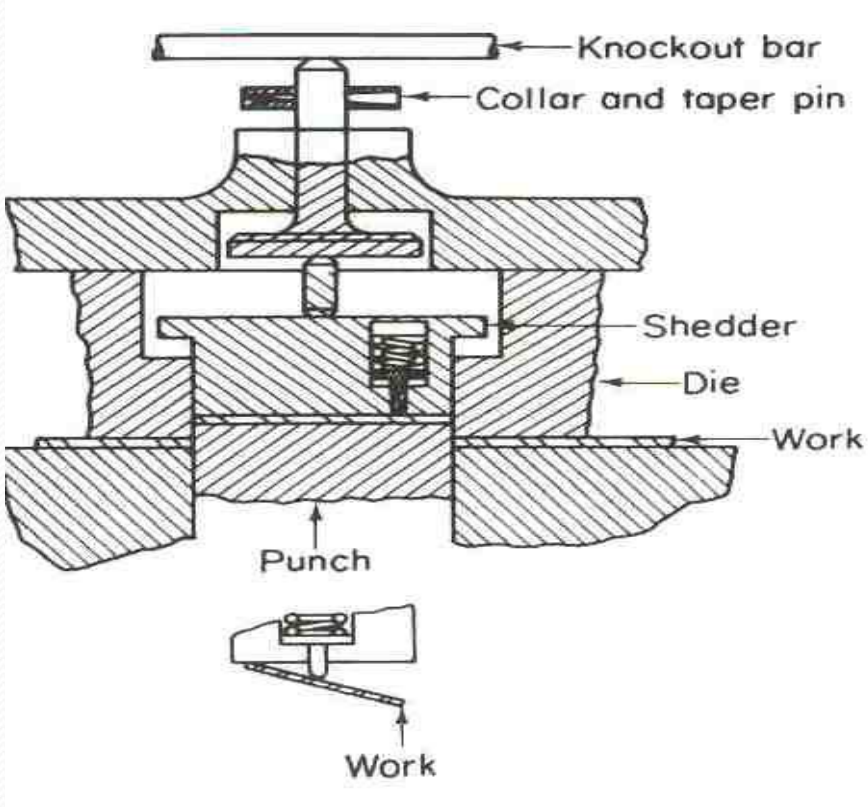
Knockout bar
Collar and taper pin
Shedder
Die
Work
Punch
Work

PILOTS

The function of the pilot is to position the work piece or stock strip accurately

In progressive dies to locate the work strip so that the relationships between stations may be maintained.

Advantage is taken of these holes so that the blank formed is exactly concentric to the pierced hole

This piloting is obtained with the help of pilots secured to the blanking punches

PILOTS

Pilots are fitted to punches by the methods:

Press fit pilot

Threaded shank pilots

Socket set screw pilots

If the operation is slow the pilots may be press fitted into a hole in the center of punch

If there is any danger of pilot dropping out, it should be fastened

PILOTS

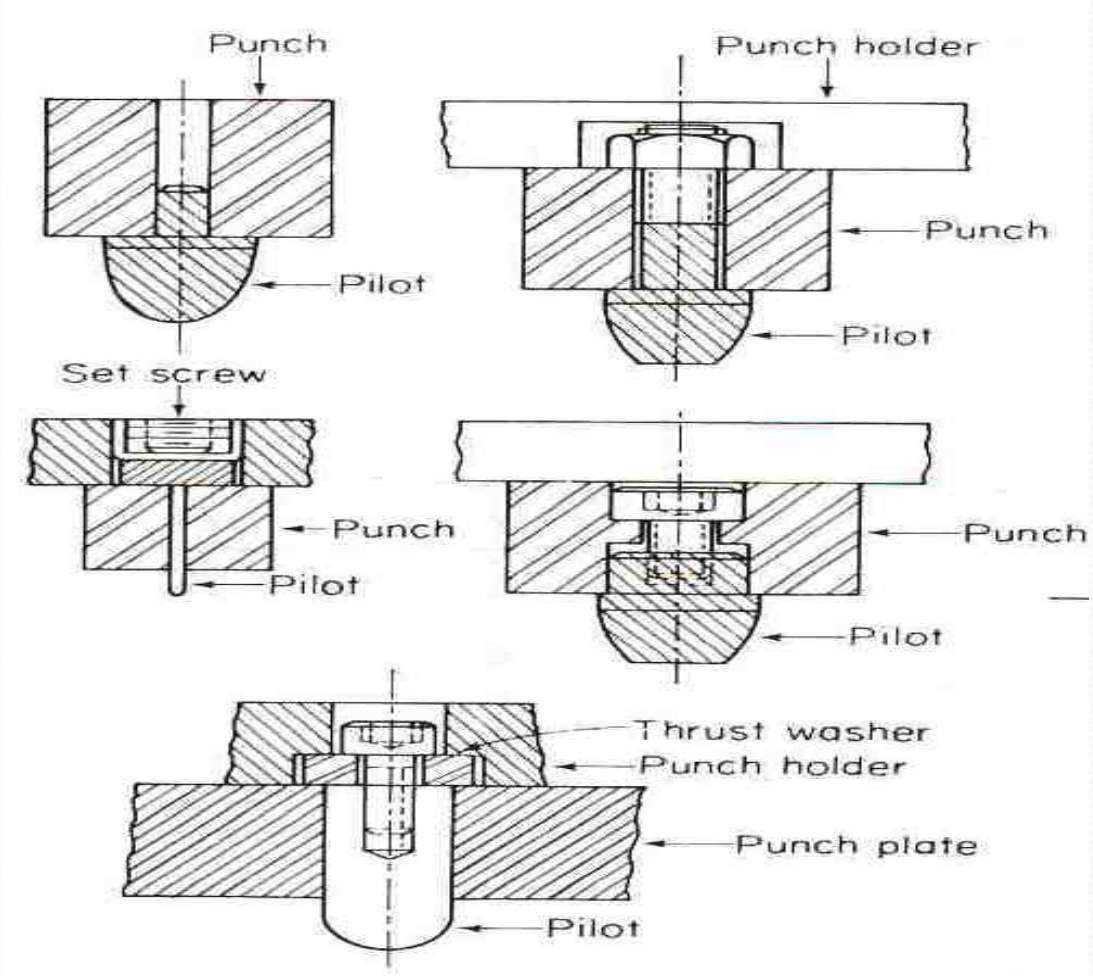
Punch
Pilot
Punch holder
Punch
Pilot
Set screw
Punch
Pilot
Punch
Pilot
Thrust washer
Punch holder
Punch plate
Pilot

STRIPPERS

They are used to remove the stock from the punch after a blanking or piercing operation

Classified as fixed and spring–operated

Fixed strippers are solidly attached to the die block or die shoe

Spring operated strippers travel up and down on the shank of the punch

STRIPPERS

CHANNEL STRIPPERS:

- A type of fixed stripper
- Consists of a rectangular plate mounted on top of die block
- A channel or groove is milled through which the strip is passed
- The height of the channel should be 1 ½ times the stock thickness
- The width must be equal to the strip width plus some clearance to allow variation in strip width

STRIPPERS

CHANNEL STRIPPERS:

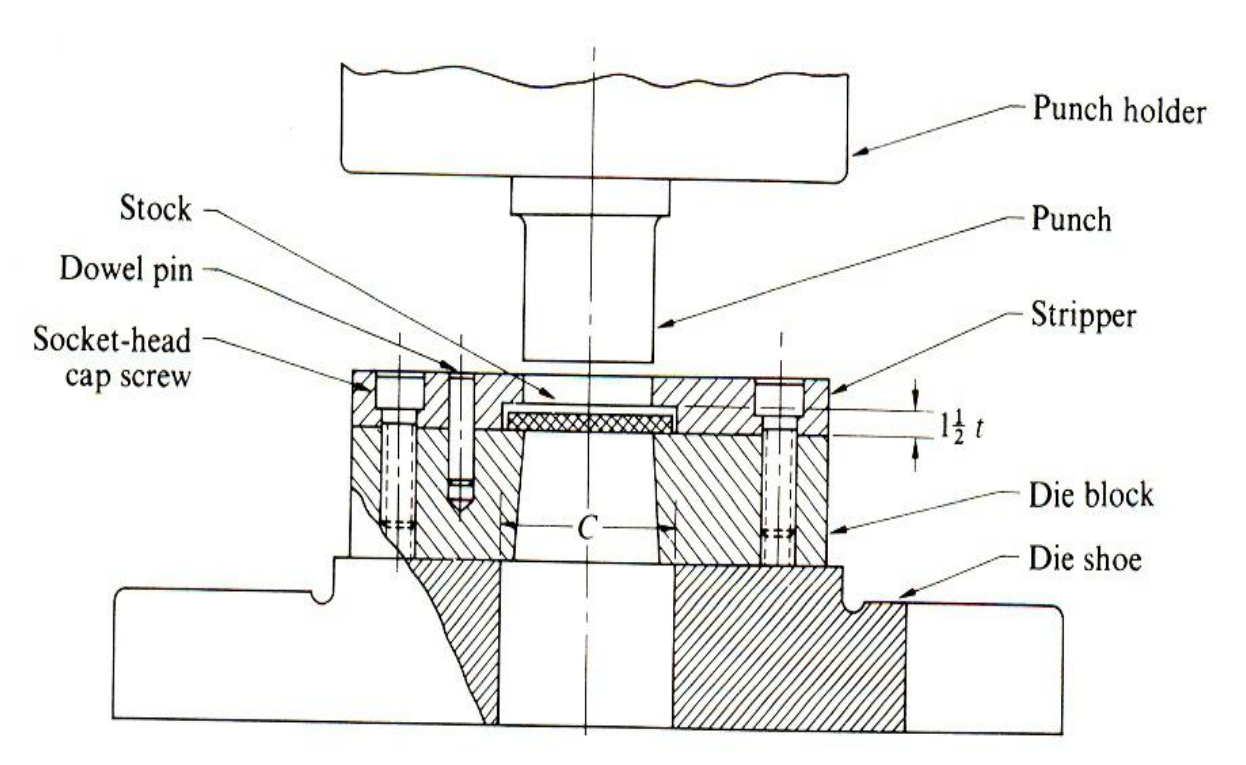

SPRING-OPERATED STRIPPERS

- Also called pressure pad strippers
- Employ springs to apply pressure to the stock strip
- Suspended from punch holder with stripper bolts and compression springs
- An advantage of this type is that it tends to hold the strip flat during the press cycle

SPRING-OPERATED STRIPPERS

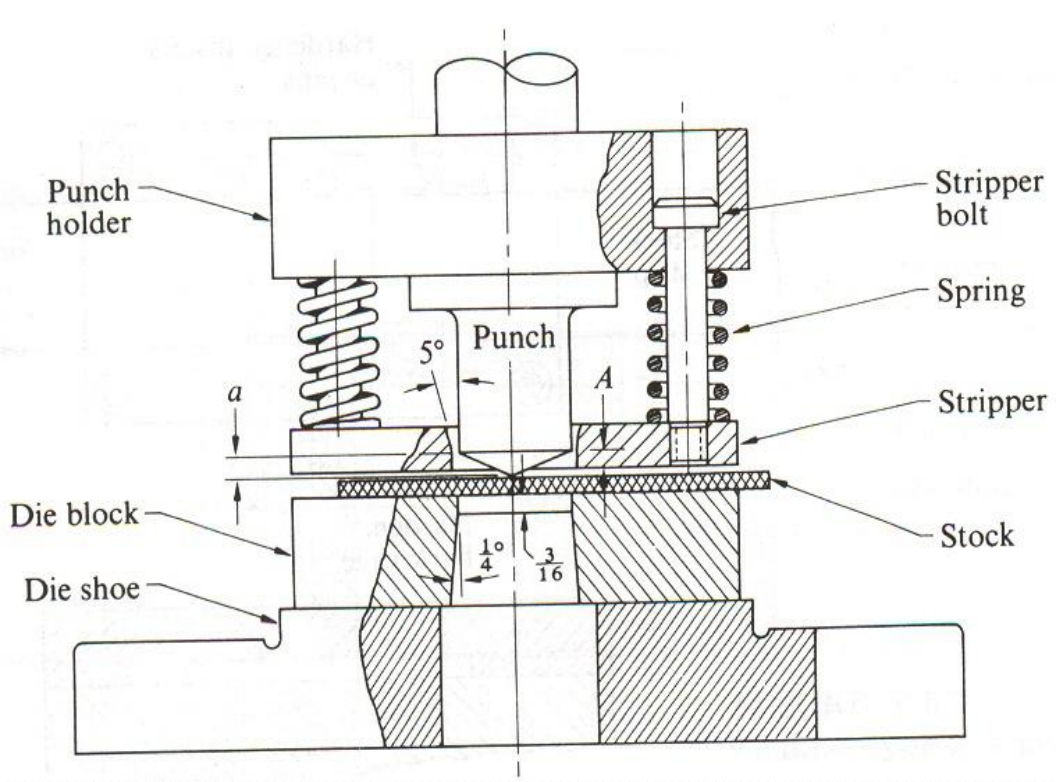

DIE STOPS (STOCK STOPS)

- Used to locate the stock in the die set when hand feeding
- The simplest form of stock stop is dowel pin
- An edge of previously blanked opening is pushed against this pin
- The stock is lifted above the pin on return stroke to release the strip from pin
- Demands considerable skill on the part of operator

STOCK STOPS

Dowel pin used as stop

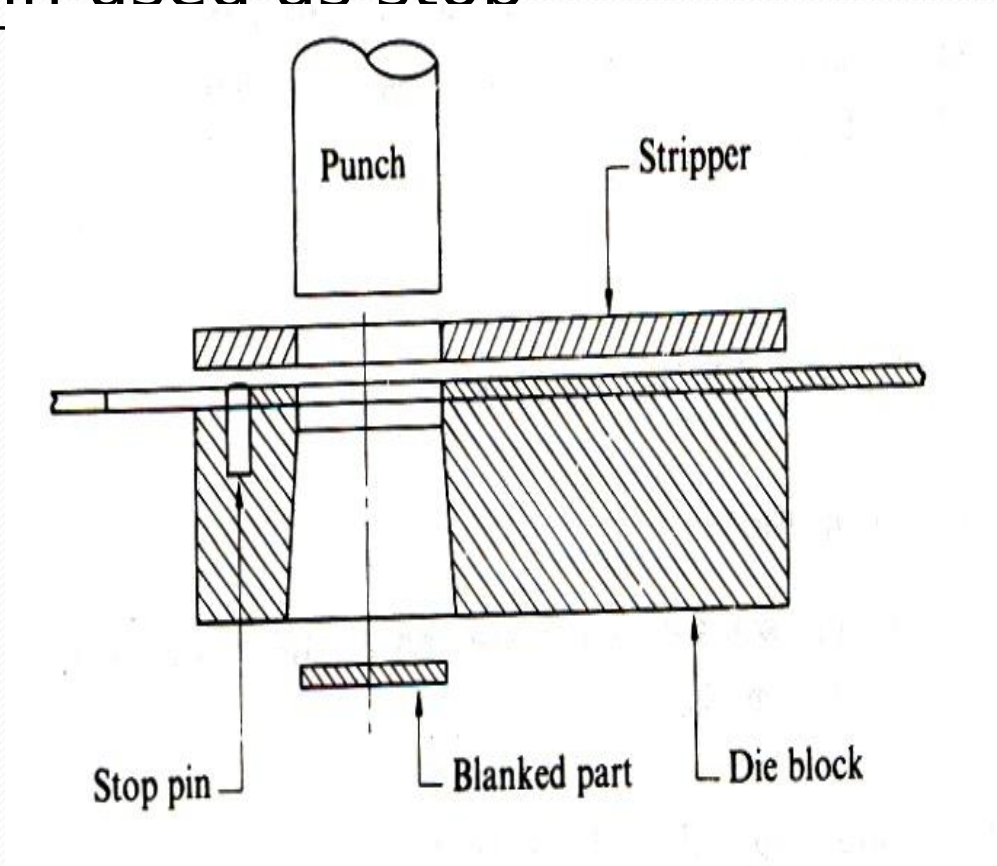

STOCK STOPS

‘Trip stop’ is another type of stock stop

The pawl rises on ratchet principle

When the operator pulls the stock back, the pawl drops and locates the stock

A ratchet is a device used to restrict motion in one direction

STOCK STOPS

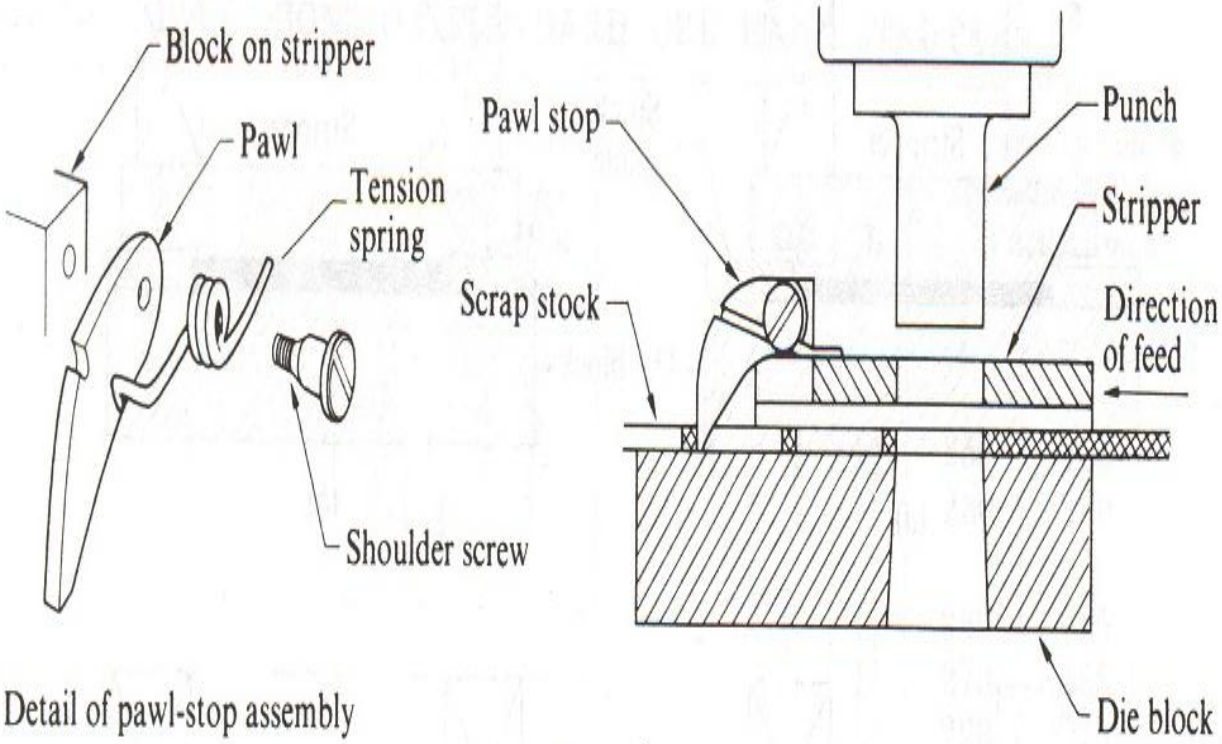

Detail of pawl-stop assembly

STOCK STOPS

‘Finger stops’ are used to start new strips in the proper location in a die

They are pushed into the stock channel until they seat

The press is tripped, the stop is released and returns to its out position

It is not used again until a new strip is started

They are also called ‘primary’ stops

STOCK STOPS

Finger stop